INSTALLATION AND OPERATION MANUAL

Jandy Pro Series
JXi™ Gas-Fired Pool and Spa Heater
Models 200, 260, 400

⚠ WARNING **IF THESE INSTRUCTIONS ARE NOT FOLLOWED EXACTLY, A FIRE OR EXPLOSION MAY RESULT, CAUSING PROPERTY DAMAGE, PERSONAL INJURY, OR DEATH.**

FOR YOUR SAFETY: This product must be installed and serviced by a contractor who is licensed and qualified in pool equipment by the jurisdiction in which the product will be installed where such state or local requirements exists. In the event no such state or local requirement exists, the installer or maintainer must be a professional with sufficient experience in pool equipment installation and maintenance so that all of the instructions in this manual can be followed exactly. Before installing this product, read and follow all warning notices and instructions that accompany this product. Failure to follow warning notices and instructions may result in property damage, personal injury, or death. Improper installation and/or operation can create carbon monoxide gas and flue gases which can cause serious injury, property damage, or death. For indoor installations, as an additional measure of safety, Zodiac Pool Systems, Inc. strongly recommends installation of suitable carbon monoxide detectors in the vicinity of this appliance and in any adjacent occupied spaces. Improper installation and/or operation will void the warranty.

Do not store or use gasoline or other flammable vapors and liquids in the vicinity of this or any other appliance.

WHAT TO DO IF YOU SMELL GAS

- Immediately switch off main gas supply.
- Do not try to light any appliance.
- Do not touch any electrical switch; do not use any phone in your building.
- Immediately call your gas supplier from a neighbor's phone. Follow the gas supplier's instructions.
- If you cannot reach your gas supplier, call the fire department.

Installation and service must be performed by a qualified installer, service agency or the gas supplier.

H0574300_REVB

Table of Contents

Section 1. General Information 3
1.1 Technical Assistance 3
1.2 Warranty 3
1.3 Consumer Information and Safety..... 3
1.4 General Operation Description..... 3
1.5 Specifications 4
1.6 Dimensions..... 4
1.7 Certification Codes and Standards..... 5
1.8 Heater Components 5

Section 2. Getting Started..... 6
2.1 Package Contents 6
2.2 Required Equipment..... 7

Section 3. Location Requirements..... 8
3.1 Clearances 8
3.2 Outdoor Installation 9
3.3 Indoor and Outdoor Shelter Installation.....11

Section 4. Gas Connections 15
4.1 Supply Gas Requirements 15
4.2 Inlet Gas Pressure Test 16
4.3 Gas Offset Pressure Test 16
4.4 Special Precautions for LP Gas..... 18

Section 5. Water Connections 18
5.1 Pump Sizing 19
5.2 Plumbing Connections 20
5.3 Water Pressure Switch Adjustment. 21
5.4 Check Valve Installation 22
5.5 Pressure Relief Valve Installation..... 22
5.6 Auxiliary Components, Chlorinators, Ozone Generators, and Sanitizing Chemicals..... 23

Section 6. Electrical Connections..... 24
6.1 Service Access 25
6.2 Main Wiring Connections 25
6.3 Input Voltage and Conversion 26
6.4 Bonding 26

Section 7. Optional Remote Controls..... 26
7.1 Connecting to a Remote Pool-Off-Spa Selector (3-Wire Connection)..... 27
7.2 Connecting to an AquaLink® Control System or Remote TSTAT (2-Wire Connection)..... 27
7.3 “Smart” Communication via RS-485 28

Section 8. Operating Instructions..... 29
8.1 Important Safety Information 29
8.2 First-Time Start-Up Procedure 29
8.3 To Turn Off Gas To The Heater 30
8.4 Normal Operation 30
8.5 Operating the Controller 32
8.6 Shutting Down the Heater 33

Section 9. Maintenance..... 34
9.1 Water Chemistry..... 34
9.2 Swimming Pool Energy Saving Tips..... 35
9.3 Winterizing..... 35
9.4 Spring Start-up 35
9.5 Inspection and Service 36

Section 10. Troubleshooting 37
10.1 Common Problems..... 37
10.2 Service Diagnostic Messages 38
10.3 Ignition Control LED Service Codes..... 38

Section 11. Professional Service and Maintenance 39

Section 12. Spare Parts..... 39
12.1 Major Components 39
12.2 Cabinet Assembly Spare Parts List and Exploded Parts Diagram 40
12.3 Heat System Spare Parts List and Exploded Parts Diagrams..... 41
12.4 Water System Spare Parts List and Exploded Parts Diagrams..... 43
12.5 Electrical System Spare Parts List and Exploded Parts Diagrams 44

Section 1. General Information

This manual provides installation and operation instructions for the Jandy Pro Series JXi pool and spa gas heater product line.

Read the installation and operation instructions completely before proceeding with the installation.

1.1 Technical Assistance

Web: www.jandy.com **Phone:** 800.822.7933

1.2 Warranty

This heater is sold with a limited factory warranty. Details are included with this heater.

Make all warranty claims to a Zodiac® dealer or directly to the factory. Claims must include the heater serial number and model (this information can be found on the rating plate), installation date, and name of the installer. Shipping costs are not included in the warranty coverage.

The warranty does NOT cover damage caused by improper assembly, installation, operation or field modification. Also, damage to the heat exchanger by corrosive water is NOT covered by the warranty.

NOTE: Keep this manual in a safe place for future reference when inspecting or servicing the heater.

1.3 Consumer Information and Safety

The heater is designed and manufactured to provide many years of safe and reliable service when installed, operated, and maintained according to the information in this manual and the installation codes referred to throughout. Be sure to read and comply with all warnings and cautions.

⚠ WARNING

Improper installation or maintenance can cause nausea or asphyxiation from carbon monoxide in flue gases which could result in severe injury, or death. For indoor installations, as an additional measure of safety, Zodiac Pool Systems, Inc. strongly recommends the installation of suitable Carbon Monoxide detectors in the vicinity of this appliance and in any adjacent occupied spaces.

⚠ WARNING

The following "Safety Rules for Hot Tubs," recommended by the U.S. Consumer Product Safety Commission, should be observed when using the spa. Consult heater operation and installation instructions for water temperature guidelines before setting temperature.

- Spa or hot tub water temperature should never exceed 104°F (40°C). One hundred degrees Fahrenheit (100°F [38°C]) is considered safe for a healthy adult. Special caution is recommended for young children.
- The drinking of alcoholic beverages before or during spa or hot tub use can cause drowsiness which could lead to unconsciousness, and subsequently result in drowning.
- **Pregnant women take note!** Soaking in water above 102°F (38.5°C) can cause fetal damage during the first three (3) months of pregnancy (which could result in the birth of a brain-damaged or deformed child). If pregnant women are going to use a spa or hot tub, they should make sure the water temperature is below 100°F (38°C) maximum.
- The water temperature should always be checked with an accurate thermometer before entering a spa or hot tub. Temperature controls may vary by as much as 1F°/1C°.
- Persons with a medical history of heart disease, diabetes, circulatory or blood pressure problems should consult their physician before using a hot tub or spa.
- Persons taking any medication which induces drowsiness (e.g., tranquilizers, antihistamines, or anticoagulants) should not use spas or hot tubs.
- Prolonged immersion in hot water can induce hyperthermia.
- Hyperthermia occurs when the internal body temperature reaches a level several degrees above the normal body temperature of 98.6°F (37°C). Symptoms include dizziness, fainting, drowsiness, lethargy, and an increase in the internal body temperature. The effects of hyperthermia include:
  - Lack of awareness of impending hazard
  - Failure to perceive heat
  - Failure to recognize need to leave spa
  - Physical inability to leave spa
  - Fetal damage in pregnant women
  - Unconsciousness resulting in a danger of drowning

1.4 General Operation Description

The blower draws air and fuel through specially designed orifices, delivering a precise mixture to the burner, located inside the sealed combustion chamber. Water flows through the heat exchanger, which surrounds the burner transferring the heat to the water. Exhaust gases are then directed through a duct where it is vented to the atmosphere.

1.5 Specifications

	SUPPLY GAS		
INSTALLATION LOCATION*	*NATURAL GAS (NG)*	CERTIFIED INDOOR/OUTDOOR	
	LIQUID PROPANE (LP)	CERTIFIED INDOOR (US ONLY) / OUTDOOR / COVERED SHELTER	
GAS PIPE HEATER GAS VALVE CONNECTION†	*NATURAL GAS (NG)*	3/4" NPT	
	LIQUID PROPANE (LP)	3/4" NPT	
INLET GAS SUPPLY PRESSURE		**Min**	**Max**
	NATURAL GAS (NG)	4.0" WC	10.0" WC
	LIQUID PROPANE (LP)		14.0" WC
GAS VALVE OFFSET PRESSURE‡	*NATURAL GAS (NG)*	.2" WC	.2" WC
	LIQUID PROPANE (LP)		
WATER PIPE/HEATER CONNECTION	*NATURAL GAS (NG)*	• PVC/CPVC 2" unthreaded • Jandy Pro Series threaded union	
	LIQUID PROPANE (LP)		
WATER FLOW RATE		**Min**	**Max**
	NATURAL GAS (NG)	30 gpm (76 lpm)	100 gpm (454 lpm)
	LIQUID PROPANE (LP)		
WORKING WATER PRESSURE		**Min**	**Max**
	NATURAL GAS (NG)	2 psi	50 psi
	LIQUID PROPANE (LP)		
EXHAUST VENT CONNECTION SIZE (CATEGORY I)§	*NATURAL GAS (NG)*	• Model 200: 6 " • Model 260: 7 " • Model 400: 8 "	
	LIQUID PROPANE (LP)		
EXHAUST VENT CONNECTION SIZE (CATEGORY III)	*NATURAL GAS (NG)*	See Section *3.3.3*	
	LIQUID PROPANE (LP)		
ELECTRICAL SUPPLY	*NATURAL GAS (NG)*	• 120 VAC • 240 VAC	
	LIQUID PROPANE (LP)		
HIGH ALTITUDE	*NATURAL GAS (NG)*	Appliances are normally derated when installed at high elevation. This is not necessary with the JXi heater because it has a special venturi-type combustion system which self-compensates for changes in barometric pressure. Air flow through the blower inlet pulls the correct flow of gas into the burner regardless of air density. JXi heaters are CSA certified for elevations of up to 4,500 feet above sea level. At elevations above 4,500 ft., the heater BTU output can be expected to be reduced by 4% for every 1,000 feet over 4,500 feet above sea level.	
	LIQUID PROPANE (LP)		

* Indoor installation is not recommended for liquid propane heaters. Review Special Precautions for liquid propane heaters (Section *4.4*)
†For gas pipe size requirements see *Section 4*
‡ All readings must be taken while the heater is operating
§ Use type B double-wall gas vent, per table 13.1(a) NFPA 54

Any changes to the heater, gas controls, air orifice, gas orifices, wiring, or improper installation may void the warranty. If change is required to any of the above; contact your local Jandy distributor, visit www.jandy.com or call technical support at 800.822.7933.

1.6 Dimensions

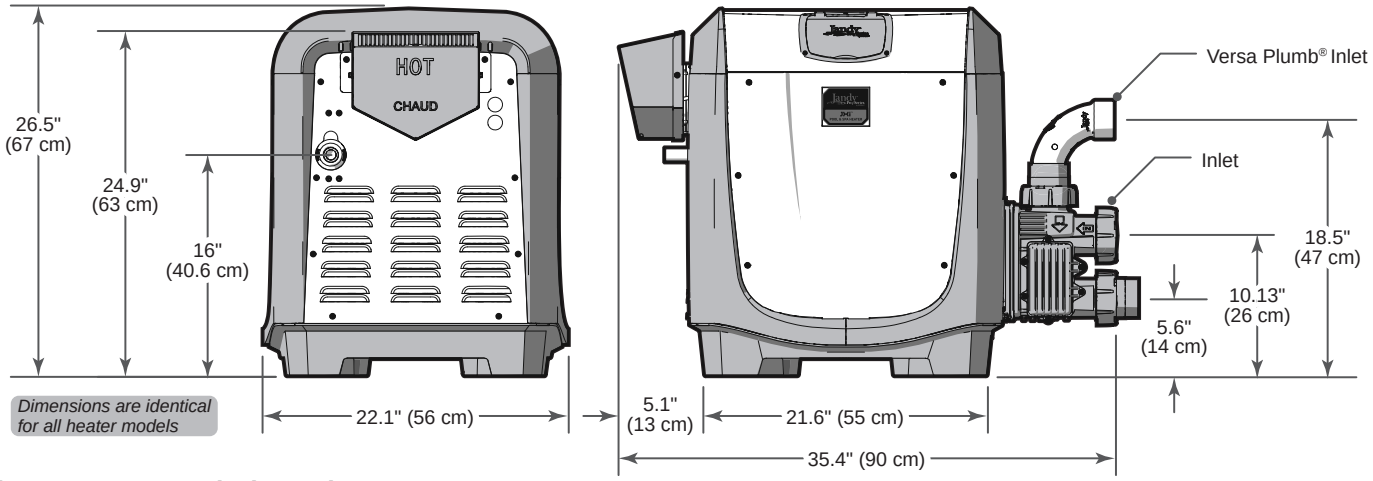

Figure 1. General Dimensions

1.7 Certification Codes and Standards

	USA	CANADA
DESIGN CERTIFIED	**CSA** (Canadian Standards Association)	
COMPLIANT	**ANSI® Z21.56** **California South Coast Air Quality Management District's (SCAQMD) Rule 1146.2**	**CSA 4.7**
NATIONAL CODES	National Fuel Gas Code **NFPA® 54/ANSI Z223.1** Pay particular attention to the chapter addressing Venting of Equipment	Natural Gas and Propane Installation Code **CAN/CSA-B149.1** Minimum combustion air requirements MUST be followed for proper and safe operation. Failures may occur when only the minimum combustion air openings are used.

All Jandy Pro Series heaters must be installed in accordance with the local building and installation codes as per the utility or Authority Having Jurisdiction (AHJ). In the absence of local codes, please refer to the latest edition of the national codes for installation.

JXi pool and spa heaters meet or exceed the requirements of energy conservation regulations such as those in states that have disallowed the use of continuously lit pilot type ignition sources.

1.8 Heater Components

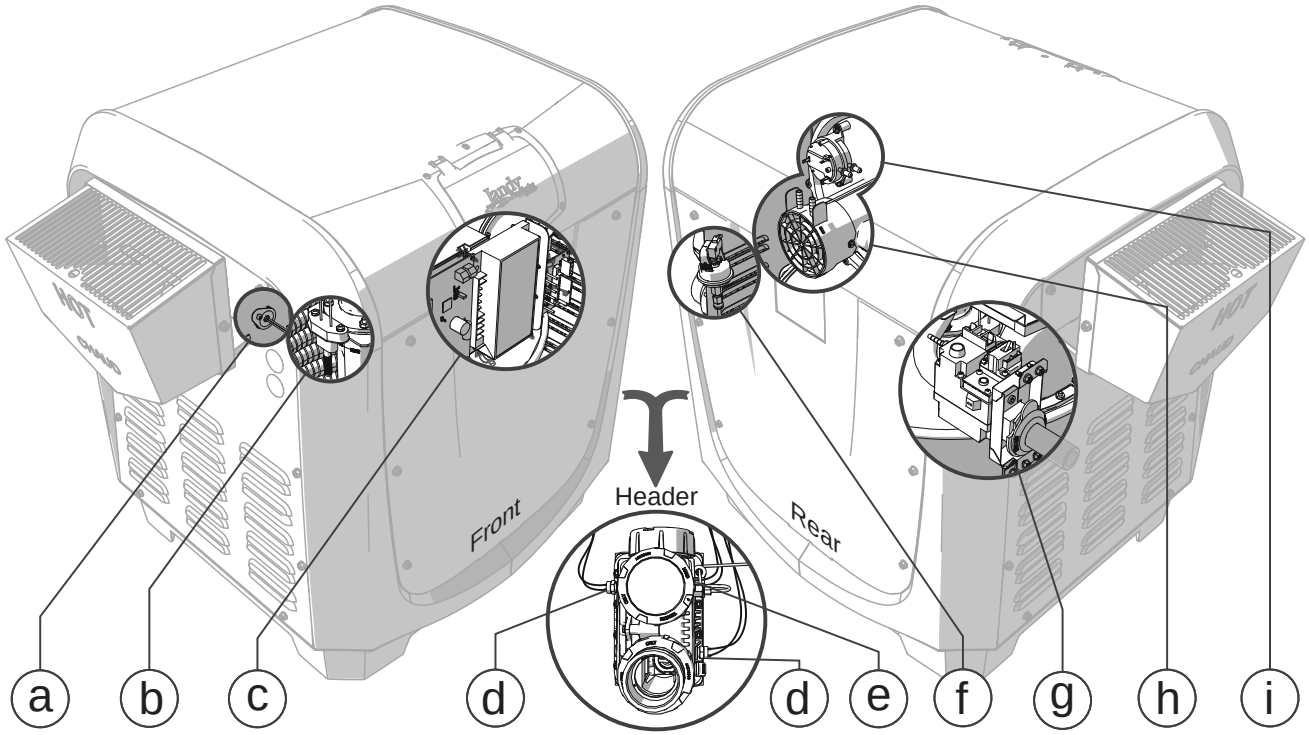

(a) ***Flue Temperature Sensor*** Monitors temperature at the exhaust flue. If excessive temperatures are detected, combustion will stop and a fault will be displayed.

(b) ***Hot Surface Igniter*** When current is passed through the ceramic material of the igniter it will achieve temperatures great enough to initiate combustion of the air/fuel mixture.

(c) ***Ignition Control*** Provides energy for ignition, monitors flame quality and controls the gas valve. Upon call for heat, the blower is activated to purge the combustion chamber. Electrical power is then applied to the hot surface igniter. When ignition temperature is attained, the gas valve opens and ignition occurs. If stable flame is detected the igniter will power down. If stable flame is not detected the control system will close the valve to prevent further gas release. If a total of 3 ignition attempts fail an ignition fault is displayed.

(d) ***High Limit Switches*** Prevent water of excessive temperatures from being discharged from the heater. If either switch, one at the heat exchanger first pass 57°C and one at the heat exchanger outlet 65°C, senses excessive temperature, the gas valve will close and combustion will stop.

Indicates a safety control equipped to protect internal components and extend the life of the heater.

(e) ***Pool/Spa Water Temperature Control*** Senses water temperature by means of a thermistor. Heater will operate to attain and maintain the water temperature according to the heater settings. Two separate thermostat settings are supported, typically used to set pool and spa temperatures.

(f) ***Water Pressure Switch*** Senses whether or not water is available to the heater by measuring back pressure at the header inlet. If insufficient pressure is detected, the display will indicate a "Check Flow" fault and combustion will stop.

(g) ***Gas Valve*** Controls gas flow into the burner. Enables flow when the temperature control calls for heat and all safety controls enable operation. It also regulates gas pressure to -2" WC (Water Column) below the air pressure at the blower inlet. Necessary pressure regulation cannot be accomplished with common (positive pressure) gas valves.

(h) ***Combustion Blower and Air Orifice*** Draws in air and fuel gas creating an air/fuel mixture that is passed through the burner for combustion. The fan will operate for several seconds before flame initiation and after the flame is extinguished to purge the combustion chamber for a clean burn and to expel any residual exhaust gas.

(i) ***Air Pressure Switch*** Monitors the vacuum (negative pressure) within the blower housing. This switch verifies that air is flowing through the combustion system by sensing pressure. If air flow is inadequate, combustion will stop and a fault will be displayed.

Section 2. Getting Started

Install the JXi in accordance with the procedures in this manual, local codes and ordinances, and in accordance with the latest edition of the appropriate national code. See *Section 1.7*.

If the heater is to operated in below freezing conditions it should be installed in a protected outdoor shelter. See *Section 3.3*

All gas-fired products require correct installation to ensure safe operation. The requirements for pool heaters include the following:

- Field assembly (if required)
- Appropriate site location, clearances and flooring see *Section 3*
- Sufficient combustion and ventilation air
- Properly sized gas meter and piping
- Proper electrical wiring
- Sufficient water flow

This manual provides the information needed to meet these requirements. Review all applications and installation procedures before continuing the installation.

2.1 Package Contents

Before completely unpacking the unit please inspect carton for damage. In addition, please check the carton label to ensure that you have the correct fuel type and BTU rating for your application.

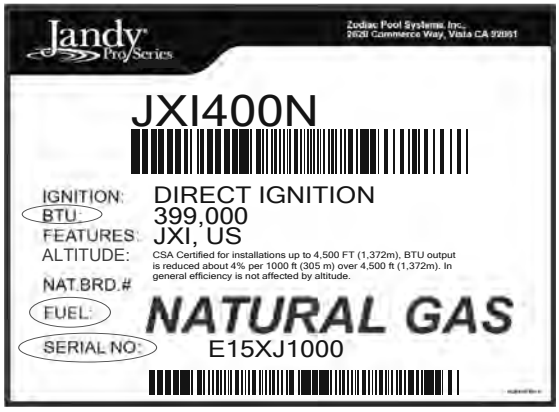

OR

Item	Description	Qty.
1	JXi Heater	1
2	VersaPlumb® Sweep Elbow	1
3	2” Universal Union Tailpiece	2

Item	Description	Qty.
4	2” Universal Union Cap	1
5	2” Universal Union O-ring	3
6	2” Universal Union Nut	3

NOTE: 1 EA of item 4, item 5 and item 6 will come pre-installed at the horizontal manifold inlet.

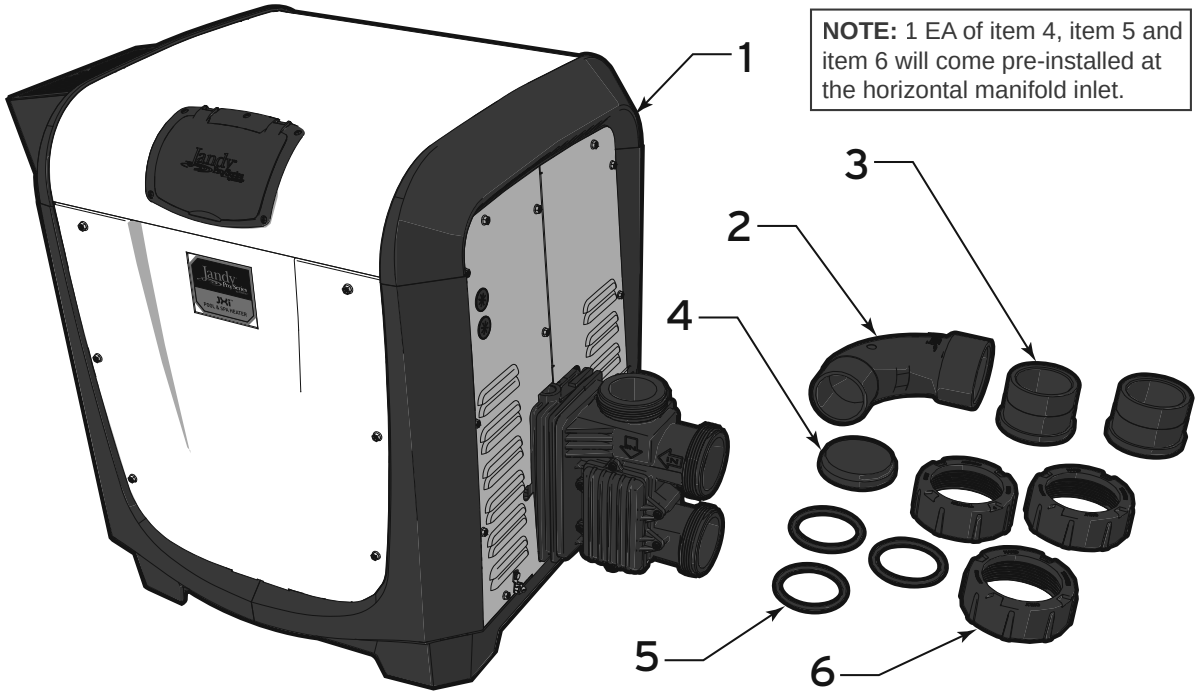

2.2 Required Equipment

Please ensure that the following equipment is available to the installer at the time of installation.

2.2.1 Tools

Safety Eyewear

Gloves

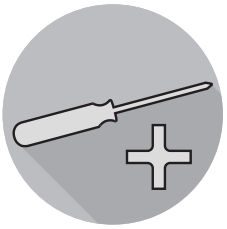

Phillips Screwdriver

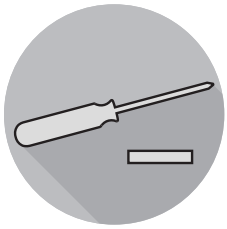

Flathead Screwdriver

Pipe Wrench

Adjustable Wrench

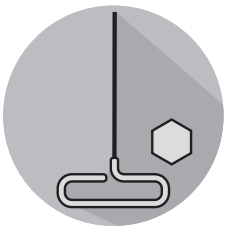

3/16” Hex Key

Channel Locks

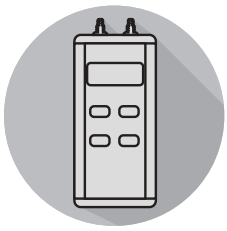

Digital Differential Manometer

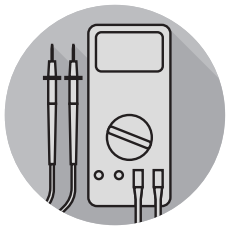

Voltage Meter

PVC Pipe Cutter

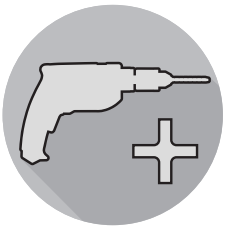

Power Drill

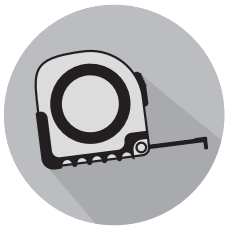

Tape Measure

2.2.2 Materials Supplied by Installer

Please ensure that all materials used during the installation are in accordance with local codes or the authority having jurisdiction (AHJ) requirements. If you have any questions regarding the materials that need to be used during this installation please call the Zodiac customer service center at 1-800-822-7933.

Indoor installations will require additional venting and exhaust conversion materials which are outlined in detail in *Section 3.3*

NOTE: Required materials may differ from the materials listed. Be sure to confirm with all local and national codes before beginning the installation.

GAS SUPPLIES	ELECTRICAL SUPPLIES	PLUMBING SUPPLIES
Appropriately sized Gas Piping (see Section *4.1)*	120 or 240 VAC	PVC Piping
Manual Gas Shut Off Valve	Conduit Elbow/ Conduit connector.	PVC Cement
Gas Union	Flexible Conduit	Teflon Tape
Cap	Wire Nuts	
Leak Solution		
1/16” Hose “T”		
1/8” - 1/16” Barbed Adapter		
1/16” Flexible Hose		

Section 3. Location Requirements

The JXi heater is shipped from the factory with an exhaust vent configured for outdoor installation. The heater is also design-certified for indoor installations in the United States and for outdoor shelter installations in Canada. See *Section 3.3* for details.

Location of the heater below or above the pool water level affects operation of its water pressure switch. See sections *5.3* for more information.

NOTE: If the heater is to be operated in below freezing conditions it should be installed in a protected outdoor shelter.

CAUTION

When pool equipment is located below the pool surface, a leak from any component can cause large scale water loss or flooding. Zodiac Pool Systems, Inc., cannot be responsible for such water loss or flooding or resulting damage.

3.1 Clearances

The heater must be installed in a location that allows clearances for maintenance and inspection. Minimum distances from combustible surfaces must also be maintained. All criteria given in the following sections reflect minimum clearances as stated in the national standards. However, each installation must also be evaluated, taking into account prevailing local conditions such as wind speed and direction, proximity and height of obstructions that may block ventilation, and proximity to public access areas.

Service Clearance: 36 inches (45 cm) from top of heater for removal of top panel.

18 inches in the us and 24 inches (30 cm) in Canada from one of either the front or rear panels.

Combustible Surfaces: Each heater face requires a 6 inch (15 cm) clearance from combustible surfaces. Although it is not advisable, the heater base can be placed on a combustible surface for operation. However, **do not install the heater on carpet.**

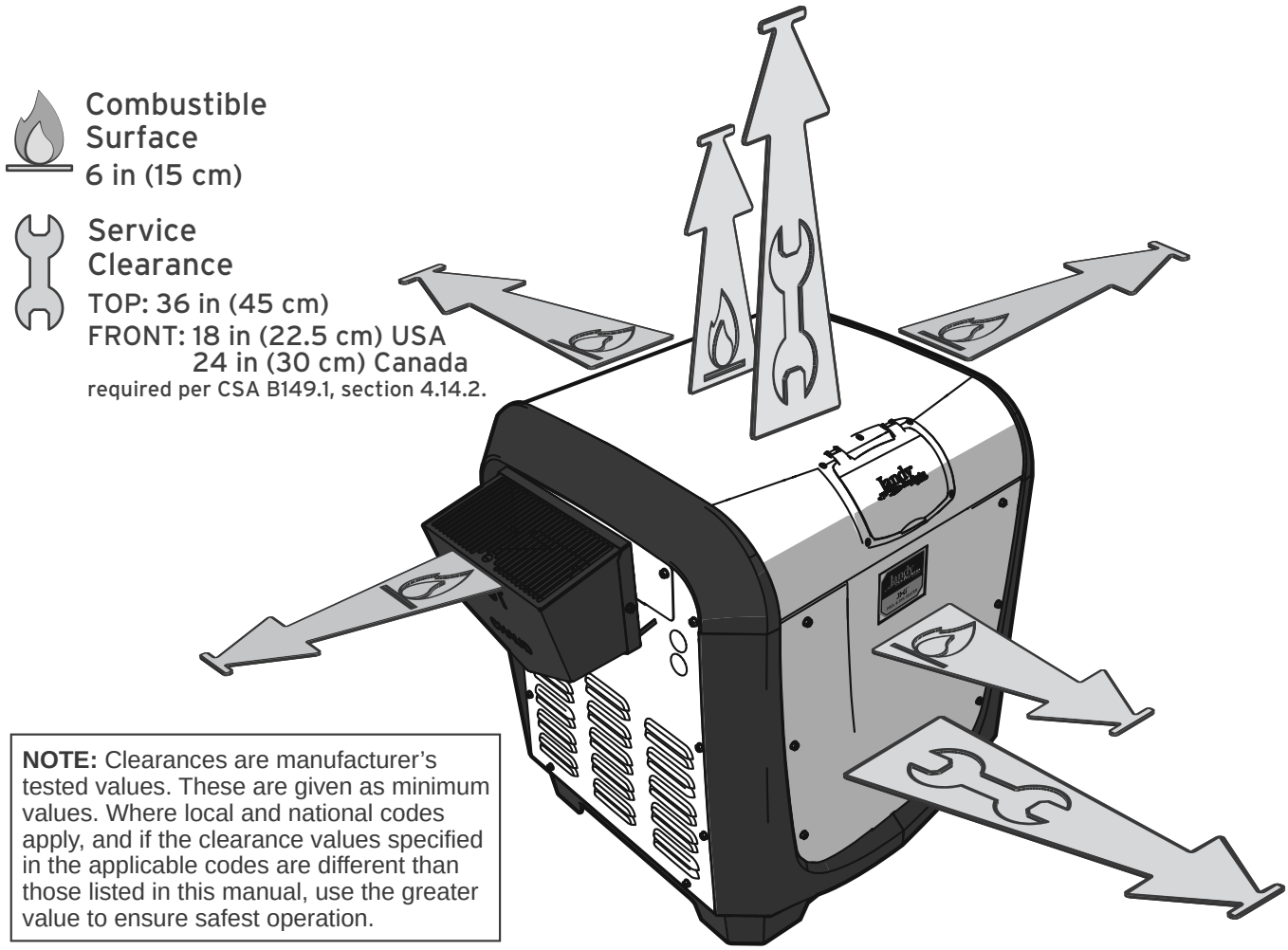

NOTE: Clearances are manufacturer's tested values. These are given as minimum values. Where local and national codes apply, and if the clearance values specified in the applicable codes are different than those listed in this manual, use the greater value to ensure safest operation.

Figure 2. Clearances

3.2 Outdoor Installation

Locate the heater:

- On a level Solid Surface
- 5 ft (1.5 m) from inner pool edge unless separated by a permanent solid barrier, i.e. a wall or fence
- In an open area, not under a deck or other structure
- Away from doors windows or louvers that connect in any way to occupied or inhabited areas of the building.

NOTE: In Canada the top of the exhaust vent must be at least 10 feet (3 m) from any building opening..

- Away from rainwater runoff
- Away from potential sprinkler water intrusion
- So that the top of the heater is at least 3 feet (1 m) below any overhang
- So that the top surface of the heater is at least 3 feet (1 m) above any forced air inlet within 10 feet (3 m)

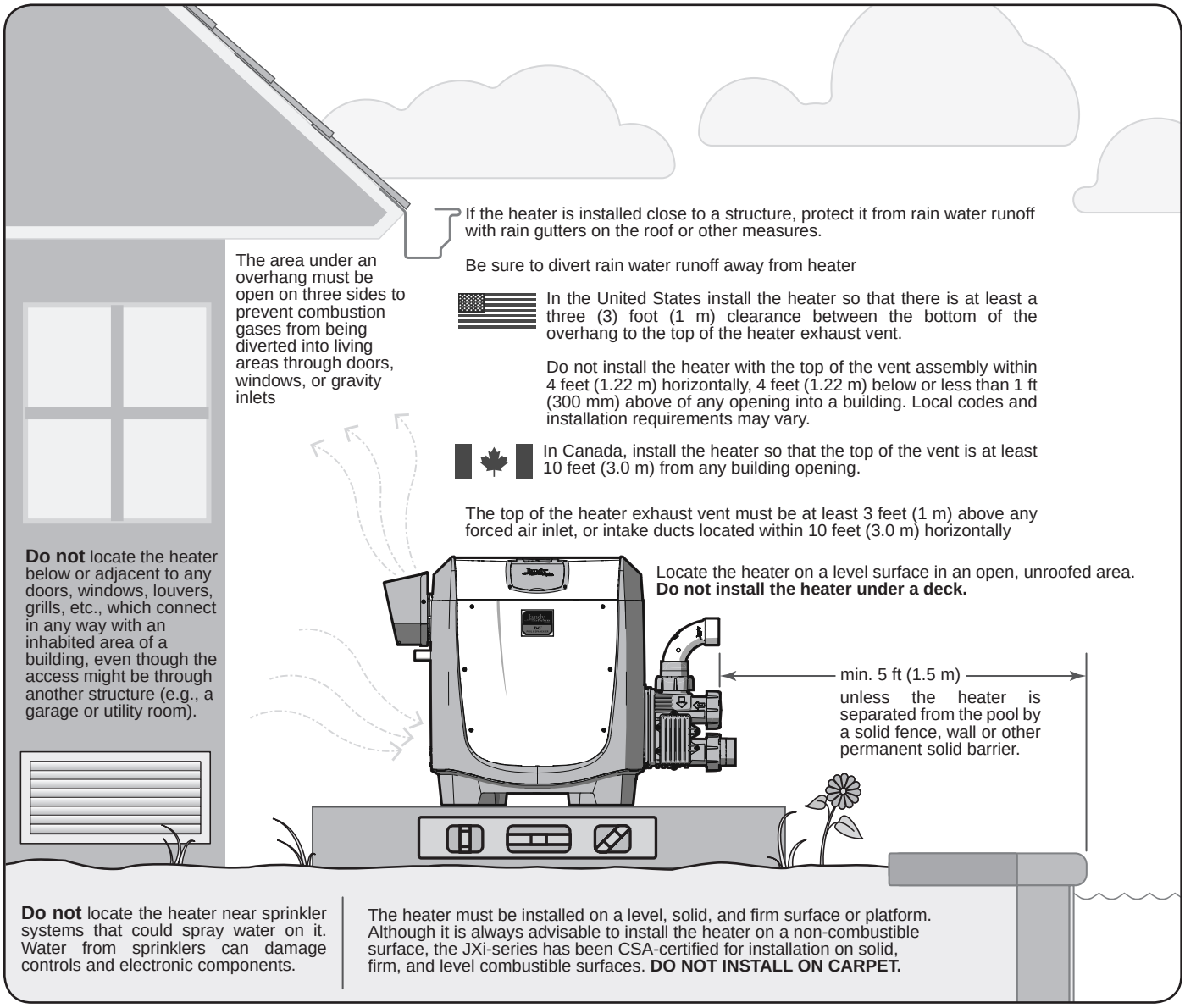

Figure 3. Location Requirements

⚠ WARNING

United States	Canada
Do not install the heater with the top of the vent assembly within 4 feet (1.22 m) horizontally, 4 feet (1.22 m) below or less than 1 ft (300 mm) above of any opening into a building. Local codes and installation requirements may vary.	Do not install the heater with the top of the vent assembly within 10 feet (3.0 m) of any opening into a building. Local codes and installation requirements may vary.

3.2.1 Anchor Bracket Installation

Anchor brackets do not come standard with the JXi if you require the anchor brackets for your installation please order kit #R0593400.

Anchor brackets should be installed in any circumstance where the heater may be subject to natural risks such as extreme weather or earthquake. In Florida, the heater is required to be securely fastened to the equipment pad to meet the applicable requirements of the Florida Building Code. Other jurisdictions may have similar requirements for extreme weather or other natural hazards. Check your local codes for details.

a Using an adjustable wrench or equivalent tool loosen (DO NOT REMOVE) the retaining nut on the bracket. The upper and lower anchor bracket should be able to rotate freely about the retaining pin.

b Slide the bracket into the slot located at the lower corner of the heater base.

c Rotate lower anchor bracket into final position. Ensure that the lower anchor bracket is flush with the equipment pad surface and level.

d Tighten the retaining nut so that the anchor bracket assembly is secure.

e Drill a hole in the concrete using the lower anchor bracket hole as a guide. It is advised that a hammer drill with an appropriate concrete drill bit be used.

f Place a screw in the hole and tighten to fasten the anchor bracket to the concrete pad. **Do not over torque the screws.**

NOTE: Depending on the location of and access to the bracket, it may be necessary to mark the drill location using the lower anchor bracket hole as a guide. Remove the bracket from the heater, drill the hole and then reattach the bracket to the heater base.

NOTE: Concrete screws are not provided in the anchor bracket kit. Use size 1/4” x 2-1/4” galvanized or plated concrete screws and washers.

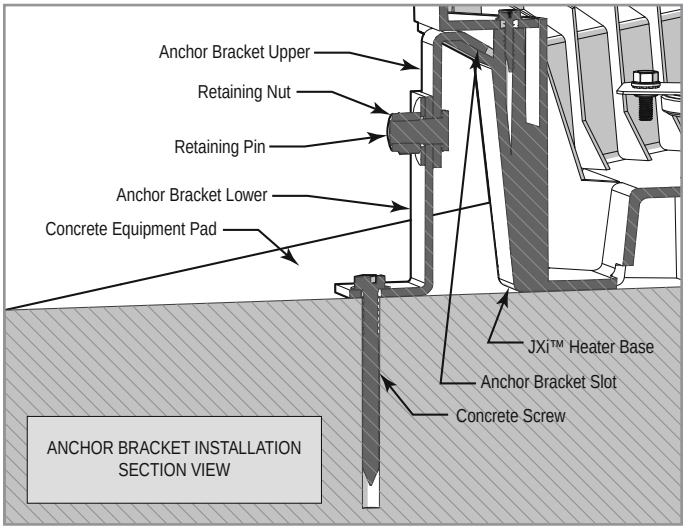

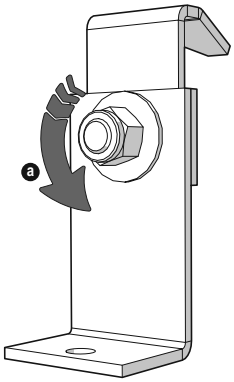

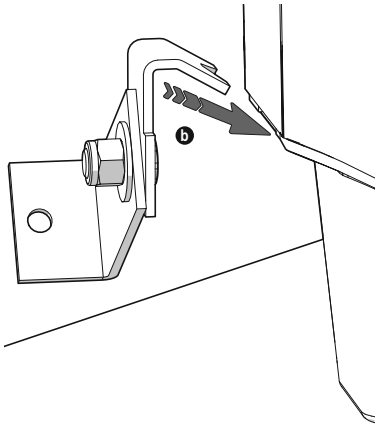

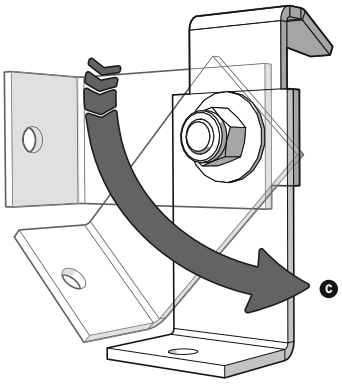

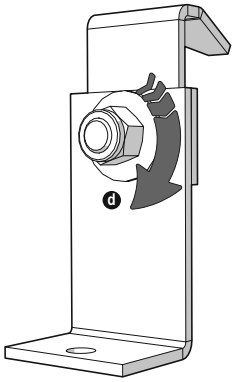

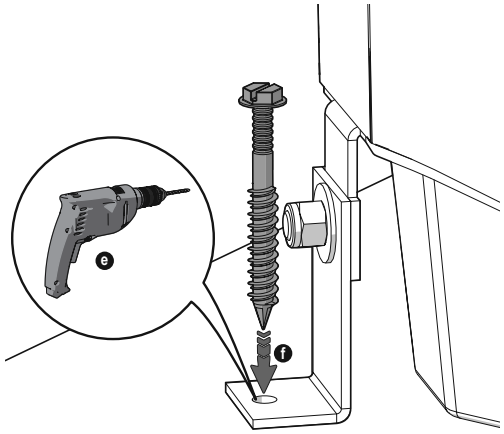

3.3 Indoor and Outdoor Shelter Installation

Due to the higher risks and hazards of liquid propane (LP) gas, Zodiac® does not encourage installation of LP gas heaters indoors. Please be sure to refer to *Section 4.4*.

The heater is CSA design-certified for indoor installations in the US and for outdoor shelter installations in Canada. Please keep in mind the service and combustible surface clearances from *Section 3.1* when selecting an installation location. You will also need to make considerations for intake combustion air see *Section 3.3.1* and exhaust venting see *Section 3.3.3*. In addition, when pool equipment is installed indoors, appropriate containment measures and drains should be considered for the prevention of property damage in the event of an equipment leak.

NOTE: An outdoor shelter is an unoccupied enclosure which does not communicate directly with occupied areas.

Zodiac Pool Systems, Inc., **does not recommend** US outdoor shelter installations that depend on internal air for combustion.

3.3.1 Combustion Intake Air Supply

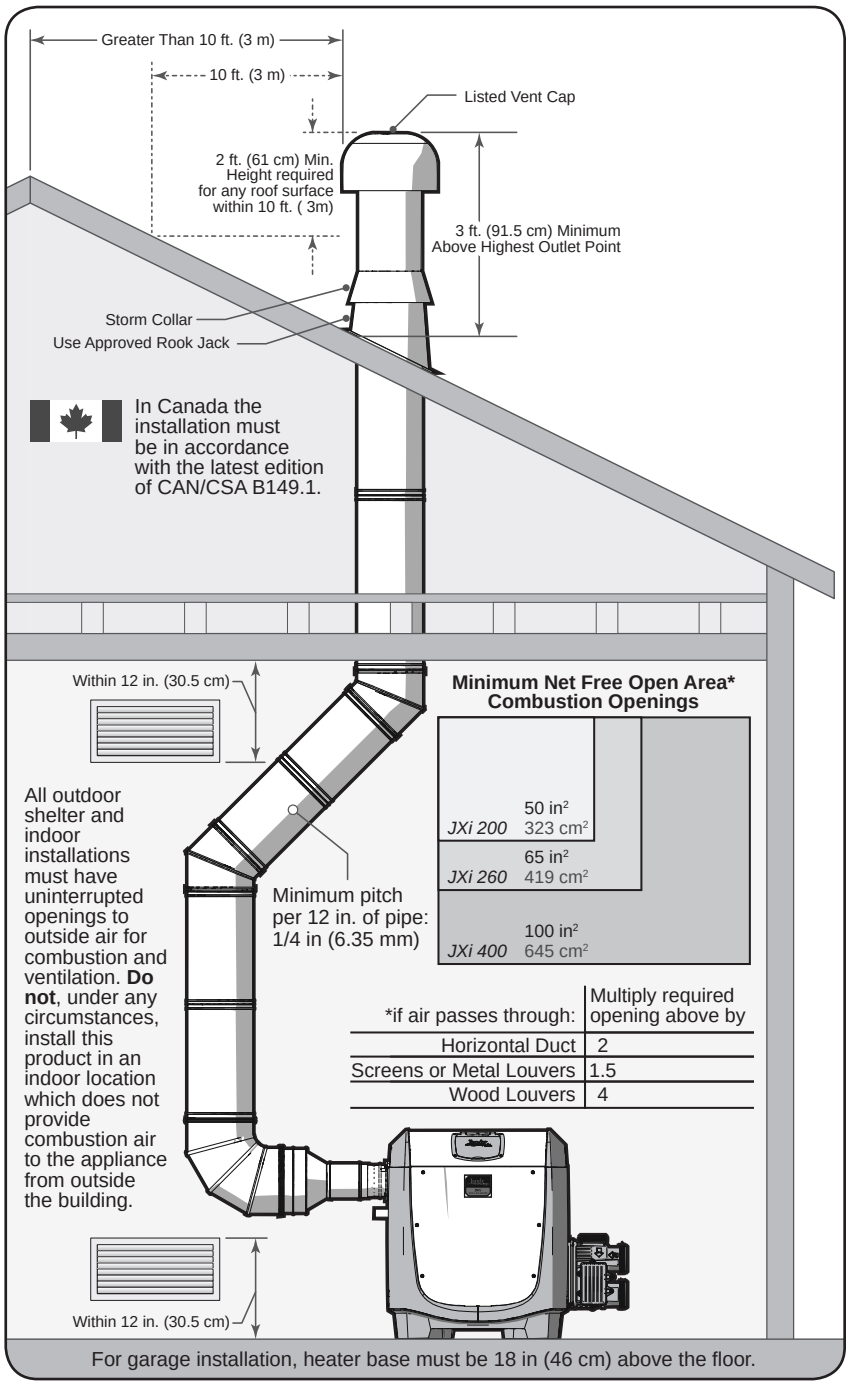

Figure 4. Indoor and Outdoor Shelter Installation

As outlined in the latest edition of ANSI® standard Z223.1 (NFPA® 54), the heater location must be properly vented to provide sufficient air supply for proper combustion.

When combustion air is supplied directly through an outside wall, each opening should have a minimum free area of 1 square inch per 4,000 BTU/h (1.2 kW) input of the total input rating of all appliances in the enclosed area. If combustion air must pass through horizontal ducts, each opening should have a minimum free area of 1 square inch per 2,000 BTU/h (1.2 kW) input of the total input rating of all appliances in the enclosed area. Details can be found in *Figure 4*.

The "Minimum Net Free Open Area" information from *Figure 4* is not applicable in installations where exhaust fans or blowers of any type are used. Any equipment which exhausts air from the room where the heater is installed can deplete the combustion air supply or reverse the natural draft action of the venting system. This could cause flue products to accumulate in the room. Additional air must be supplied to compensate for such exhaust. Consult a professional engineer to ensure that installations where exhaust fans or blowers are used are designed and installed in accordance with all applicable local and national installation codes.

In addition, the heater must be completely isolated and protected from any source of corrosive chemical fumes or corrosive vapors (i.e chlorine or hydrochloric acid).

⚠ WARNING

Do not store any chemicals, cleaners, or other corrosive material near combustion air openings or in the room. Avoid locating appliance vents in the vicinity of combustion air openings. Failure to prevent corrosive materials from mixing with combustion air can result in reduced heater life and unsafe heater operation.

3.3.2 Direct Air Intake

In certain applications it may be necessary to supply intake air directly to the heater. You will need to order and install the direct air conversion R-Kit R0724600. A total equivalent length of 50′ (15 m) of 3″ (75 mm) PVC tubing can be used to bring the intake air directly to the blower input. Please be aware that each elbow used will account for 12′ (3.6 m) of length.

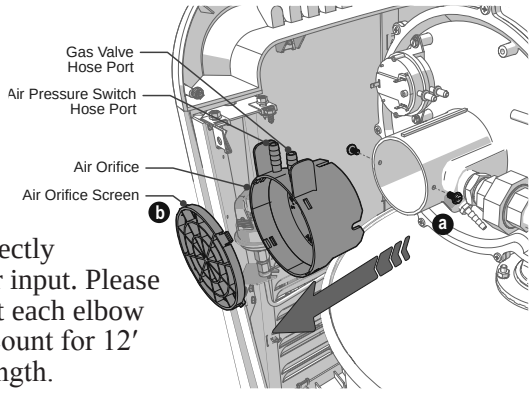

- For ease of access, remove the rear and top panels.

a Loosen the two screws securing the air orifice and screen in place. Remove the air pressure switch and gas valve hose from the air orifice.

b Remove the air orifice, separate and dispose of the orifice screen.

c Align the orifice adapter with the orifice tabs and secure with four screws.

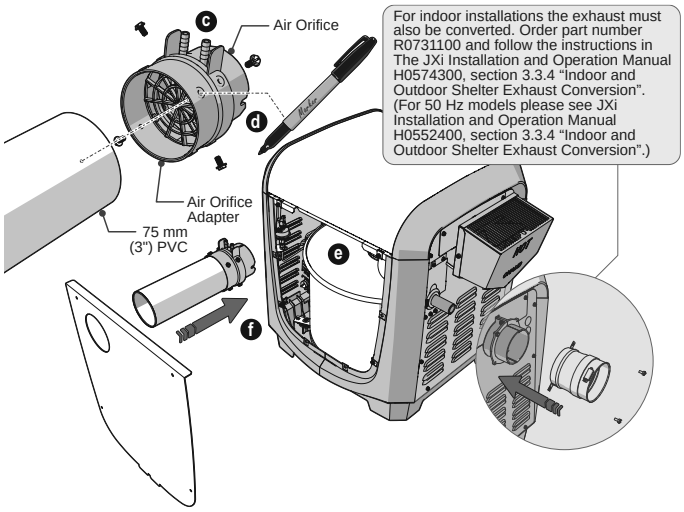

d Dry fit the 75 mm (3″) PVC tubing into the orifice adapter. Mark screw hole locations with a pen. Remove and drill pilot holes in the PVC. Fit the PVC into the orifice adapter, align the holes and secure with four screws

e Reinstall the air orifice and air hoses.

f Install the new rear panel over the PVC and secure with four screws.

3.3.3 Exhaust Venting

When the JXi heater is installed indoors or in an outdoor shelter it can be vented as a Category I or Category III appliance. In either case, the vent pipe sizing must be in accordance with the specifications listed in *Table 1*.

- **Category I:** Appliance operates with a negative vent static pressure, a vent gas temperature that avoids excessive condensate production and will vent vertically terminating at the roof.
- **Category III:** Appliance operates with a positive vent static pressure, a vent gas temperature that avoids excessive condensate production and can be vented horizontally terminating at a side wall.
- **Do not** terminate heater vents near air conditioning or air supply fans which could pick up exhaust flue products, such as carbon monoxide and other hazardous effluent, and return them inside the building.
- Vent pipe type and material must be carefully selected and depends on the type of installation.
- **Do not** locate the vent terminal where exhaust flue products could strike against building materials and cause degradation.
- Vent opening should be well away from landscaping or other obstructions that would prevent free air flow to and from vent terminal.
- **Do not** terminate vent under decks, stairs, or car ports.
- **Do not** use the appliance to support the vent pipe.
- Vent piping must be supported with no low spots or sagging which could allow condensate to collect.
- Horizontal runs must be sloped upwards away from the heater to a vent terminal at a minimum of 1/4" per horizontal foot (2 cm/m). See *Figure 4*.
- Install the vent pipe so it can expand and contract freely with temperature changes.
- **Do not** run the heater vent into a common vent with any other appliance.
- It is recommended that vent runs over 18 feet be insulated to reduce condensation and use a condensate trap in the vent run close to the heater, especially in cold climate installations.

⚠ WARNING

Vent pipe materials, sizing, and installation must be as required by the National Fuel Gas Code NFPA 54/ANSI® Z223.1 or the Canadian Installation Codes for Gas Appliances CAN/CSA-B149.1. Undersized pipe can result in inadequate venting and oversize pipe can result in vent condensation. Improper selection of vent pipe material, incorrect sizing of the pipe, and incorrect installation of vent piping can result in release of combustion products to the indoors. This can cause serious injury or death by Carbon Monoxide poisoning or asphyxiation.

⚠ WARNING

Improper installation or maintenance can cause nausea or asphyxiation from carbon monoxide in flue gases which could result in severe injury or death. For indoor installations, as an added measure of safety, Zodiac Pool Systems, Inc. strongly recommends installation of suitable carbon monoxide detectors in the vicinity of this appliance and in any adjacent occupied spaces.

Incorrect design and installation of heater vents and ducts can result in personal injury, damage to property, or death. To avoid such hazards, the heater must be installed only by a qualified professional service technician.

CODES*		National Fuel Gas code ANSI® Z223.1 (NFPA® 54)					
		CAN/CSA-B149.1					
CATEGORY	STATIC PRESS.	STACK TEMP.	CONDENSATE	TERMINATION LOCATION	PIPE SIZING		
					MODEL	PIPE SIZE	SPECIAL GAS VENT LENGTH† (VERTICAL OR HORIZONTAL)
I	Negative	High	Minimal	Roof	200	6 in (15 cm)	N/A
					260	7 in (18 cm)	N/A
					400	8 in (20 cm)	N/A
III	Positive	High	Minimal	Roof or Side Wall	200	4 in (10 cm)	50 ft (15 m)
					260	4 in (10 cm)	70 ft (21 m)
					400	4 in (10 cm)	70 ft (21 m)

*Ensure that you are referencing the latest edition and pay special attention to the chapter addressing "Venting of Equipment".

†For each elbow installed, reduce the run length by 12 feet (3.7m)

Table 1. Vent Pipe sizing Requirements

3.3.4 Indoor and Outdoor Shelter Exhaust Conversion

For both Category I and Category III vent types the heater must first be converted to indoor exhaust type. In order to complete the conversion you will need to order exhaust conversion R-Kit R0731100.

a Remove two screws securing the exhaust grill to the exhaust grill backplate.

b Remove exhaust grill.

c Remove the two screws securing the rain shield to the exhaust backplate.

d Remove Rain Shield.

e Remove the remaining two screws securing the exhaust backplate to the exhaust outlet.

f Remove the exhaust grill backplate.

g Using two #10 thread cutting screws secure the vent adapter from R-Kit R0731100 to the exhaust outlet.

h If venting for Category I, install an appropriate vent pipe increaser to accommodate the correct pipe size from *Table 1*. Secure to the vent adapter using the screw clamp.

When the installation requires horizontal venting in excess of what is allowed for Category I installations or calls for horizontal discharge, the JXi may be installed with a Category III venting system.

Vent the heater either vertically or horizontally using Al29-4C stainless steel components. Consult manufacturers such as Z-Flex® or Heat Fab® to obtain approved components. Venting materials must comply with UL® 1738 for Category III, Special Gas Vent. Based on the normally expected flue temperatures of this appliance. PLASTIC VENTING MUST NOT BE USED.

i If venting for Category III, install appropriate vent pipe from *Table 1*. Secure to the vent adapter using the screw clamp to ensure a proper seal.

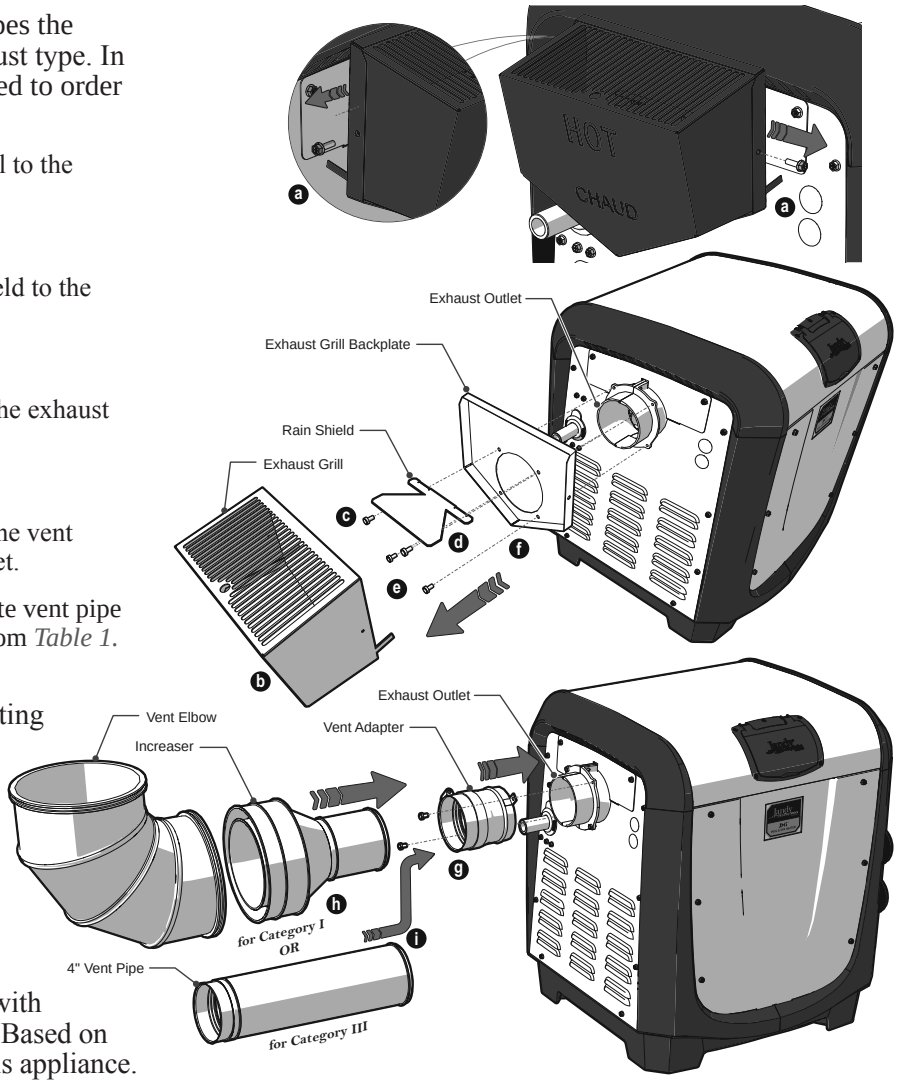

Double check that there are no possible leak paths between joints. If a leak path is identified or suspected it can be sealed using red RTV 600° F rated silicone adhesive.

When using parts or materials from other manufacturers please be sure to follow the manufacturers instructions completely to ensure harmonious function.

IMPORTANT NOTE

In the Commonwealth of Massachusetts, additional requirements, covered in document CMR 248 5.00, which supersede some of the requirements of ANSI Z223.1 (NFPA 54) apply to Side Wall Horizontally Vented appliances. If installing this product using an approved side-wall horizontal vent system in the Commonwealth of Massachusetts, be sure to adhere to these additional requirements. These requirements include verbiage that says that the property owner is to ensure that Carbon Monoxide Detectors are installed in the vicinity of the appliance and also on all levels of the dwelling in which the appliance is installed.
For further instructions, contact Technical Support at 800.822.7933.

3.3.5 Indoor and Outdoor Shelter Exhaust Termination

Category I: Appliance must be vented vertically and terminate at the roof. Vent must terminate at least 2 feet (610 mm) above any objects within 10 feet (3.05 m). Termination must pass through a properly installed and approved roof jack, a properly sized storm collar and an listed vent cap. See *Figure 4*.

Category III: Appliance can be vented vertically to terminate at the roof or vented horizontally to terminate at a side wall. Side wall vents must be installed and located in accordance with the National Fuel Gas Code NFPA® 54 / ANSI® Z223.1 or the Canadian Natural Gas and Propane Installation Code CAN/CSA-B149.1. In addition some local installation codes may have requirements that exceed those of the national codes. The product must be installed in accordance with the codes being enforced by the local Authority Having Jurisdiction (AHJ).

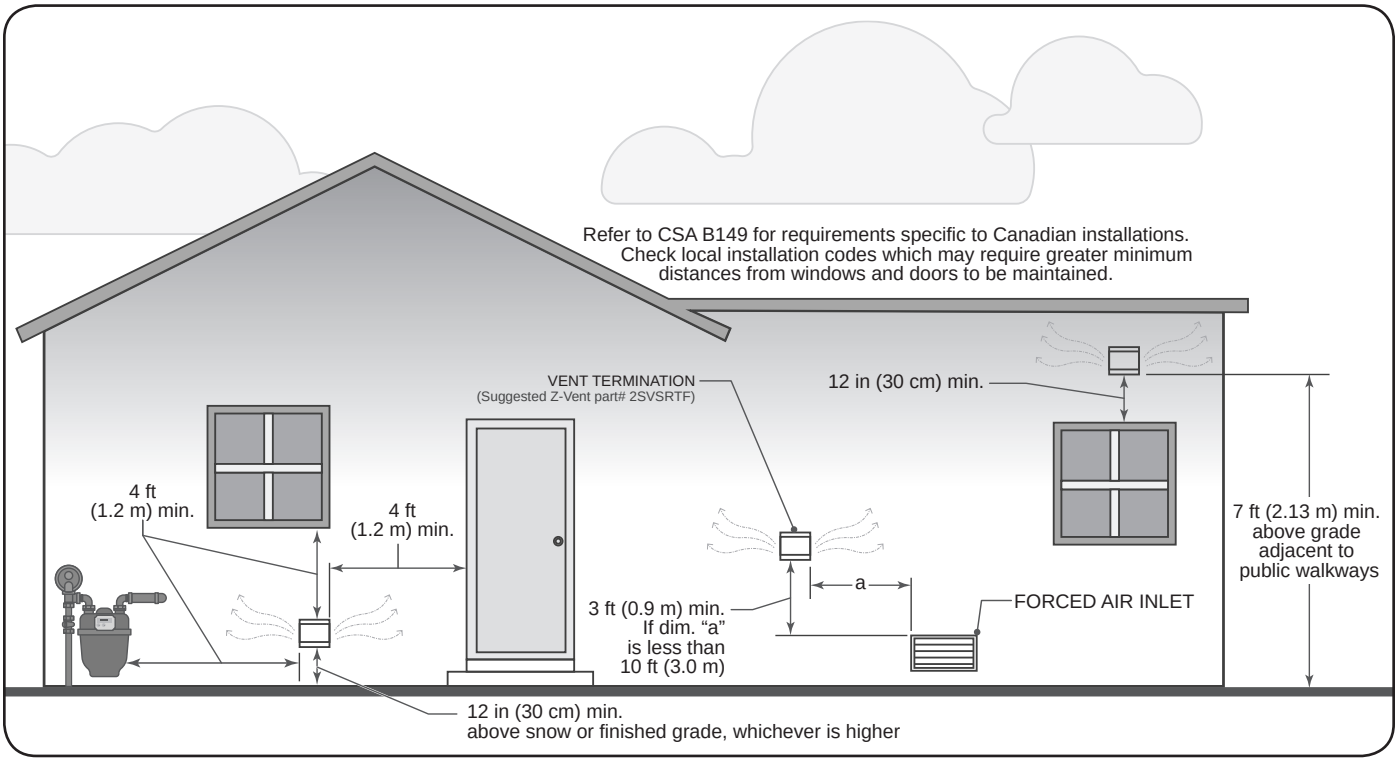

Figure 5. Side Wall Vent Termination

3.3.6 Precautions Against Common Venting

Seek the assistance of a Registered Professional Engineer for proper design of a common venting system.

Zodiac Pool Systems, Inc. does not recommend using a common vent to vent multiple appliances through a common duct. However, if no other option is deemed available by the installer, each appliance must have its own vent temperature limit switch. All vent limit switches must be wired in series so as to prevent any appliance from firing in the event of a blocked vent. An outside draft inducer must be installed to pull and create negative pressure in the vent system. Refer to ANSI® Z223.1 or in Canada CAN/CSA B149.1 for more information on common venting multiple appliances. **Do not** connect vent systems of different categories to the same venting system.

3.3.7 Inspection and Replacement of Existing Vent System with New Components

When replacing an existing pool heater with the JXi, it is recommended that a new appropriate venting system is installed with the new heater. However, if the existing venting system must be used, be sure to carefully inspect the existing system to ensure that it is in good condition and appropriate for the JXi heater. Replace any parts that are not in serviceable condition before completing the installation.

Section 4. Gas Connections

Gas piping installation must be in accordance with the latest edition of ANSI Z223.1 and all local codes. In Canada, the installation must be in accordance with CAN/CSA B149.1 and all local codes that apply.

The heater must be isolated from the gas supply piping system by closing the individual manual shut off valve during any pressure testing of the gas supply piping system at test pressure greater than or equal to 1/2 psi (3.5kPa).

CAUTION

Permanent damage to the gas valve will occur if the installation procedures are not followed correctly.

⚠ WARNING

The JXi pool and spa heaters are designed for use with either natural gas or LP gas. Check the rating plate on the front of the combustion chamber to be sure that the heater is designed to use the type of gas being supplied. CONVERTING THIS HEATER FOR USE WITH ANY OTHER FUEL TYPE IS NOT RECOMMENDED BUT, WHEN NECESSARY, SHOULD ONLY BE PERFORMED BY A LICENSED AND QUALIFIED PROFESSIONAL, AND ONLY AFTER CONTACTING ZODIAC POOL SYSTEMS FOR THE PROPER INSTRUCTIONS AND CONVERSION KIT.

All questions should be directed to the Zodiac customer service center at 1-800-822-7933

4.1 Supply Gas Requirements

	Maximum Equivalent Pipe Length									
	Natural Gas at 1050 btu per cubic foot									
	Propane Gas at 2500 btu per cubic foot									
	3/4"		1"		1-1/4"		1-1/2"		2"	
Model	NG	LP	NG	LP	NG	LP	NG	LP	NG	LP
JXi400	5 ft	20 ft	30 ft	60 ft	110 ft	260 ft	230 ft	560 ft	600 ft	600 ft
JXi260	15 ft	40 ft	60 ft	150 ft	230 ft	590 ft	490 ft	600 ft	600 ft	
JXi200	30 ft	70 ft	100 ft	240 ft	380 ft	600 ft	600 ft			

- Numbers are for natural gas (0.60 Sp. Gr.) based on 1/2 inch (3.45 kPa) water column pressure drop. Check supply pressure with a manometer, and local code requirements for variations.
- Check supply pressure and local code requirements before proceeding with installation.
- Consider pipe fittings when determining gas pipe sizing. For every elbow used add three (3) feet to straight pipe length.
- Table shows the minimum supply gas pipe size required. Larger pipe size can be used if required by local code or if desired.
- It is critical that the incoming gas supply pressure at the heater is within the maximum and minimum pressure requirements. If the range of acceptable supply pressure is not provided, the gas supply system to the heater must be modified to meet pressure requirements.

Table 2. Supply Gas Pipe Size Requirements

- Refer to *Table 2* for correct gas inlet piping length from the gas meter to the heater.
- Check the gas meter to make sure it will supply enough gas to the heater and any other appliances using the same gas supply. If unsure, contact your local gas utility to confirm.
- Install a manual gas shutoff valve outside the heater body for service and safety. Never install the shutoff valve inside the body of the heater.
- Install a sediment trap and union ahead of the gas controls and outside the heater body. See *Figure 6*.
- Do not use a restrictive gas cock.

ATTENTION

Do not use flexible appliance connectors on any gas connections unless the connector is CSA approved for outdoor installation, and is marked with the BTUH capacity (which must be equal to or greater than the heater rated input) and the type of gas (Natural or LP). Also, any flexible connectors, such as CSST buried underground must be certified for underground installation and meet all applicable codes. Please note, use of flexible connector still requires the installation of a sediment trap per NFPA 54. See *Figure 6*.

NOTE: The gas line from the meter is usually larger than the gas valve. Therefore, you will need to reduce connecting pipe as necessary. Make this reduction as close to the heater as possible.

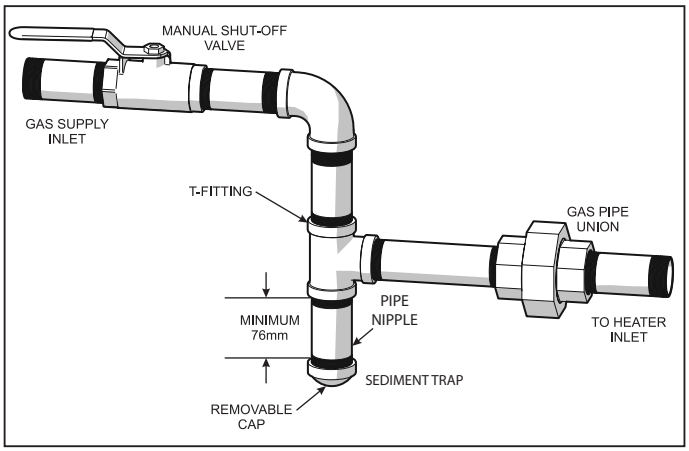

Figure 6. Manual Shut-off Valve and Sediment Trap

4.2 Inlet Gas Pressure Test

Before operating the heater it is necessary to test the input gas pressure to ensure that it falls within the required range as outlined in *Table 3*.

INLET GAS PRESSURE	NG (NATURAL GAS)	LP (LIQUID PROPANE)
	INCHES W.C.	
MAX	10.5	14
MIN	4	4

- All readings must be made while heater is operating.
- Relying on any reading taken while heater is off may result in poor performance and difficulty in operation.

Table 3. Supply Gas Input Pressure Requirements

a Pull gas inlet grommet away from heater body panel.

b Remove one screw and the gas valve access panel.

c Remove 1/8" NPT plug using a 3/16" Hex Key.

d Install a 1/8" to 1/16" barbed adapter.

e Connect positive manometer lead to barbed adapter.

- Inlet gas pressure must be taken while the heater, and if possible, all other gas burning appliances supplied by the same gas delivery system, are operating.
- If the gas supply pressure is less than required, check for an undersized pipe between the meter and the heater, a restrictive fitting, or an undersized gas meter. If needed contact the local gas utility company for assistance.
- Once proper inlet pressure has been confirmed, shut off gas supply.
- Remove manometer, hose and barbed fitting from the gas valve.
- Apply joint compound to the NPT plug and reinstall.
- Before operating the heater, test the gas supply system and all connections for leaks using a soap solution. **Do not use an open flame to test for leaks.**
- Reinstall the gas valve access panel.
- Secure the gas inlet grommet at heater side panel.

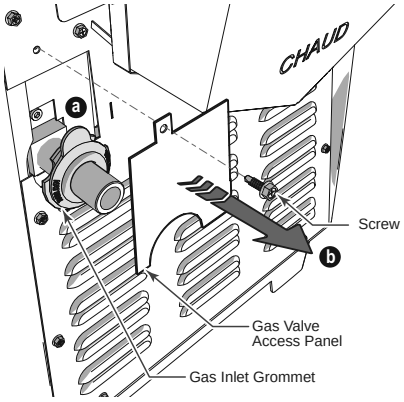

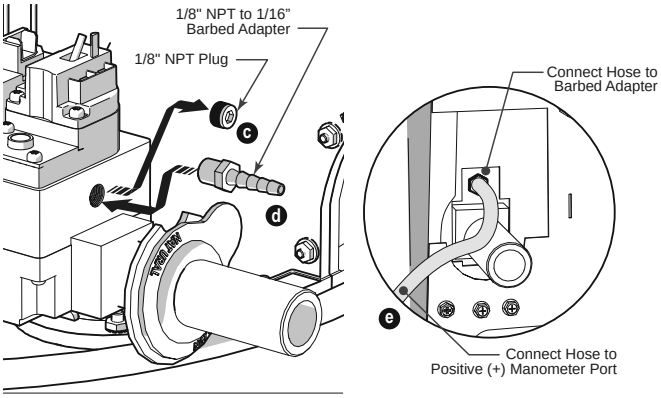

View With Side Panel Hidden

4.3 Gas Offset Pressure Test

Before operating the heater it is necessary to test the offset gas pressure to ensure that it falls within the required range of -0.2" WC (Inches Water Column) +/- 0.1" WC. This reading must be taken with the heater running using a digital differential manometer.

- Verify the manual gas shutoff valve is open.
- Remove the heater rear panel to expose the gas valve.

a Remove the four screws securing the panel to the heater body.

b Lift and remove panel. Set aside a safe distance from the work area.

c Verify that the gas valve control is in the "ON" position.

NOTE: The rear panel is the main body panel closest to the gas inlet. This may appear to be the front panel if the user interface was moved to accommodate a left side water connection. For instructions on moving the user interface see *5.2.1*.

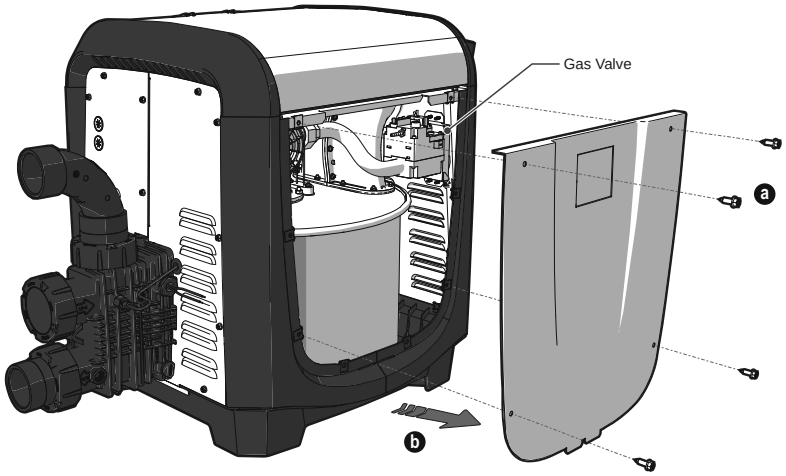

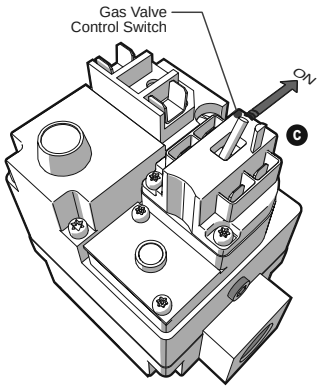

4.3.1 Connect the Digital Differential Manometer.

a Connect a tee to the hose running from the fan inlet port on the blower to the gas valve vent port.

b Connect one leg of the tee to the gas valve vent port.

c Connect the third leg of the tee to the positive (high pressure) side of the digital differential manometer.

d Remove the 1/8" NPT plug from the gas valve manifold port (labeled "PRESS" "TAP") using a 3/16" Hex Key.

e Install a 1/8" to 1/16" barbed adapter.

f Connect a hose from the barbed adapter to the negative (low pressure) side of the digital differential manometer.

- Start the heater and record the gas offset pressure.
- Measurement should be -0.2" WC (Inches Water Column) +/- 0.1" WC.
- If the offset pressure is incorrect an adjustment can be made. See *Section 4.3.2* for details
- If no adjustment is required, remove manometer, hoses, tee and barbed fitting from the gas valve.
- Reconnect the hose from the Fan Inlet Port to the Gas Valve Vent Port.
- Apply joint compound to the NPT plug and reinstall at the gas valve manifold port (labeled "PRESS" "TAP").
- Before operation, test the complete gas supply system and all connections for leaks using a soap solution. **Do not use an open flame to test for leaks.**

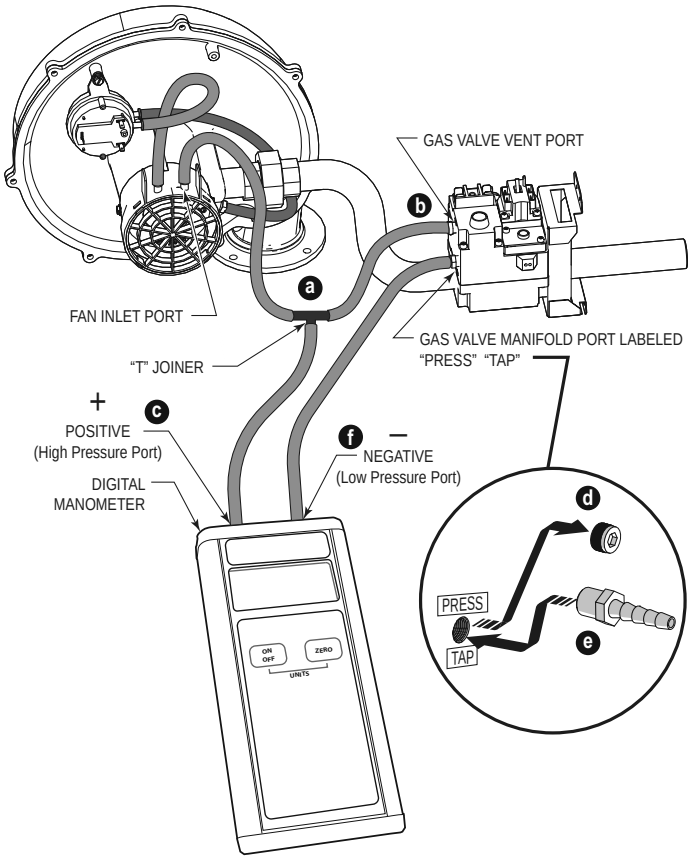

4.3.2 Gas Offset Pressure Adjustment

If the offset pressure is incorrect an adjustment can be made to bring the offset pressure within the required range. Prior to making any gas valve adjustments:

- Ensure that the inlet gas pressure from *Section 4.2* is within the specified range.
- Ensure that the manometer has been connected in accordance to steps a-f in *Section 4.3.1*.
- Ensure that all hoses, barbed fittings plugs and caps are securely in place and not leaking.
- With the heater running read and record the offset pressure displayed on the manometer. If an adjustment is still required:

a Remove the gas valve sealing cap.

b Using a flat head screwdriver turn the plastic adjustment screw as follows:

To Increase Offset Pressure:
Turn the adjustment screw 1/4 turn clockwise.

To Decrease Offset Pressure:
Turn the adjustment screw 1/4 turn counter clockwise.

- Once the proper gas offset pressure has been achieved. Securely reinstall the gas valve sealing cap.
- Shut down the heater at the user interface.
- Remove manometer, hoses, tee and barbed fitting from the gas valve.
- Apply joint compound to the NPT plug and reinstall at the gas valve manifold port (labeled "PRESS" "TAP").
- Before operation, test the complete gas supply system and all connections for leaks using a soap solution. **Do not use an open flame to test for leaks.**

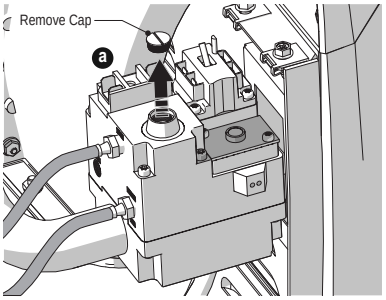

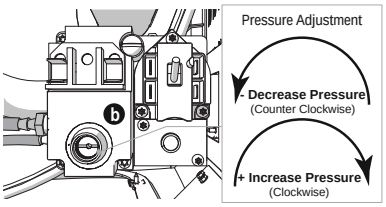

⚠ WARNING

Failure to replace the 1/8 inch NPT gas valve plugs on inlet, gas offset pressure ports, and cap on the manifold pressure adjustment screw, can result in property damage, severe injury, or death.

CAUTION

Some leak test solutions (including soap and water) may cause corrosion or stress cracking. Rinse the piping with water after testing.

4.4 Special Precautions for LP Gas

Under the same environmental conditions, liquid propane (LP) gas is more dense or heavier than air and will more readily collect or pool in enclosed areas if adequate ventilation is not provided. It is not recommended to install LP gas heaters in enclosed areas such as pits. Locate heaters a safe distance from LP gas cylinders and filling equipment. Consult the National Fuel Gas Code (NFPA® 54/ANSI® Z223.1, latest edition), the Liquefied Petroleum Gas Code (NFPA 58, latest edition), the Natural Gas and Propane Installation Code in Canada (CAN/CSA B149.1, latest edition), and any other local codes and fire protection authorities about specific installation restrictions in your area.

For ALL installations the combustion air openings requirements and NFPA54 / ANSI Z223.1 MUST be followed for safe and proper operation.

Section 5. Water Connections

Install pool system components with connections as illustrated in *Figure 7*. Any configuration other than as illustrated in *Figure 7* can affect the operation of the water pressure switch. Locating the heater above or below the pool water surface can also affect operation of the water pressure switch.

NOTE: When pool equipment is located below the pool surface, Zodiac Pool Systems, Inc. is not responsible for any large scale water loss, flooding or damage caused by a leak.

CAUTION

The pool equipment must be protected from back-siphoning of water. If there is any chance of back-siphoning, provide a check valve between the pool and the filter pump inlet.

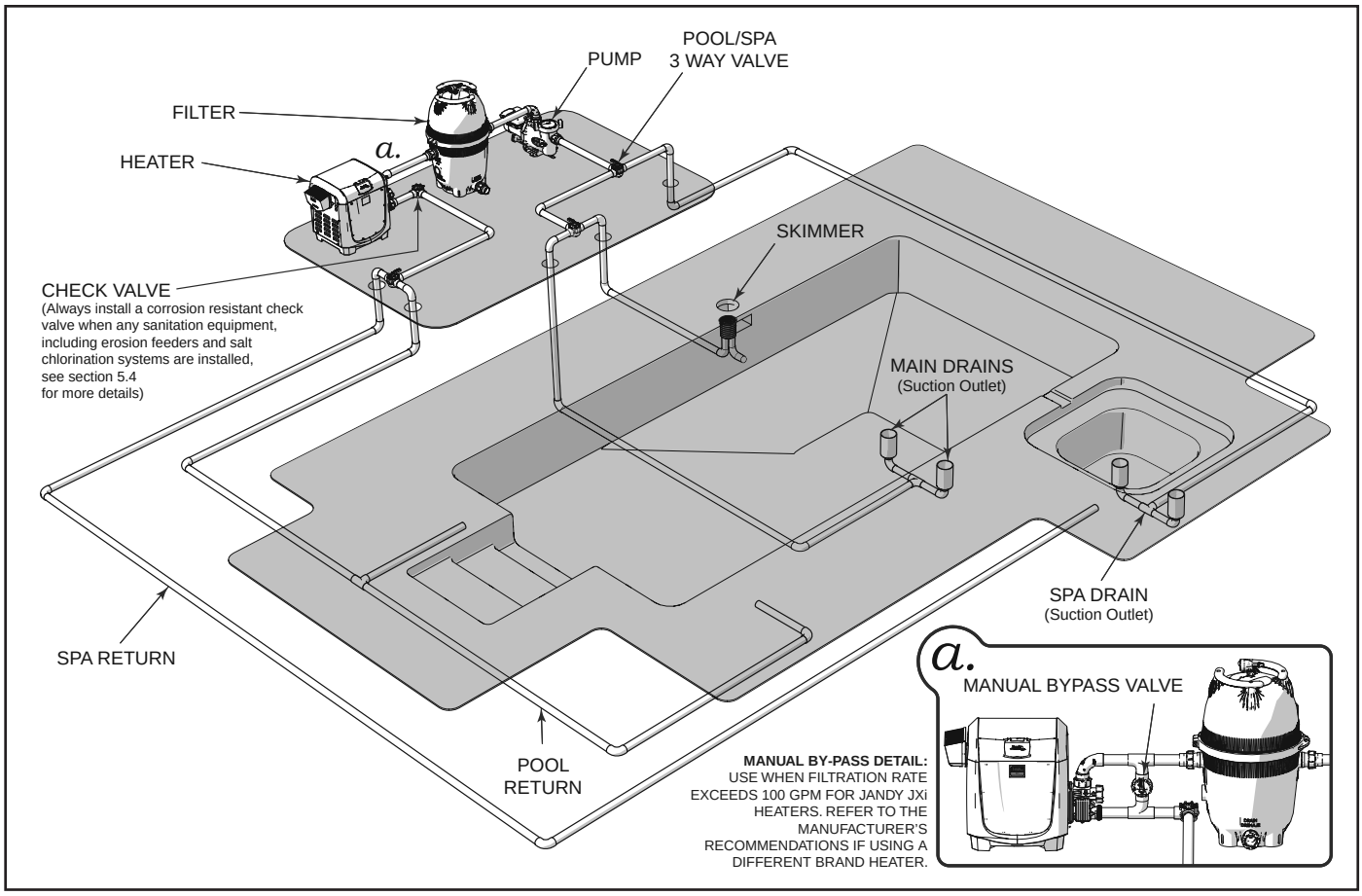

Figure 7. Typical Water Piping Configuration

5.1 Pump Sizing

The flow bypass within the heater manifold will accommodate flow rates delivered to the heater from a minimum of 30 gallons per minute (gpm) to a maximum flow of 100 gpm.

CAUTION

The system water pump must be capable of providing no less than 30 gpm of flow through the heater. Flow rates at less than 30 gpm may cause nuisance operation causing the heater to turn off or damage to the heater.

MODEL	MIN GPM (LPM)	MAX GPM (LPM)
JXI 200	30 (114)	100 (379)
JXI 260	30 (114)	100 (379)
JXI 400	30 (114)	100 (379)

Table 4. Recommended Flow Rate Adjustment

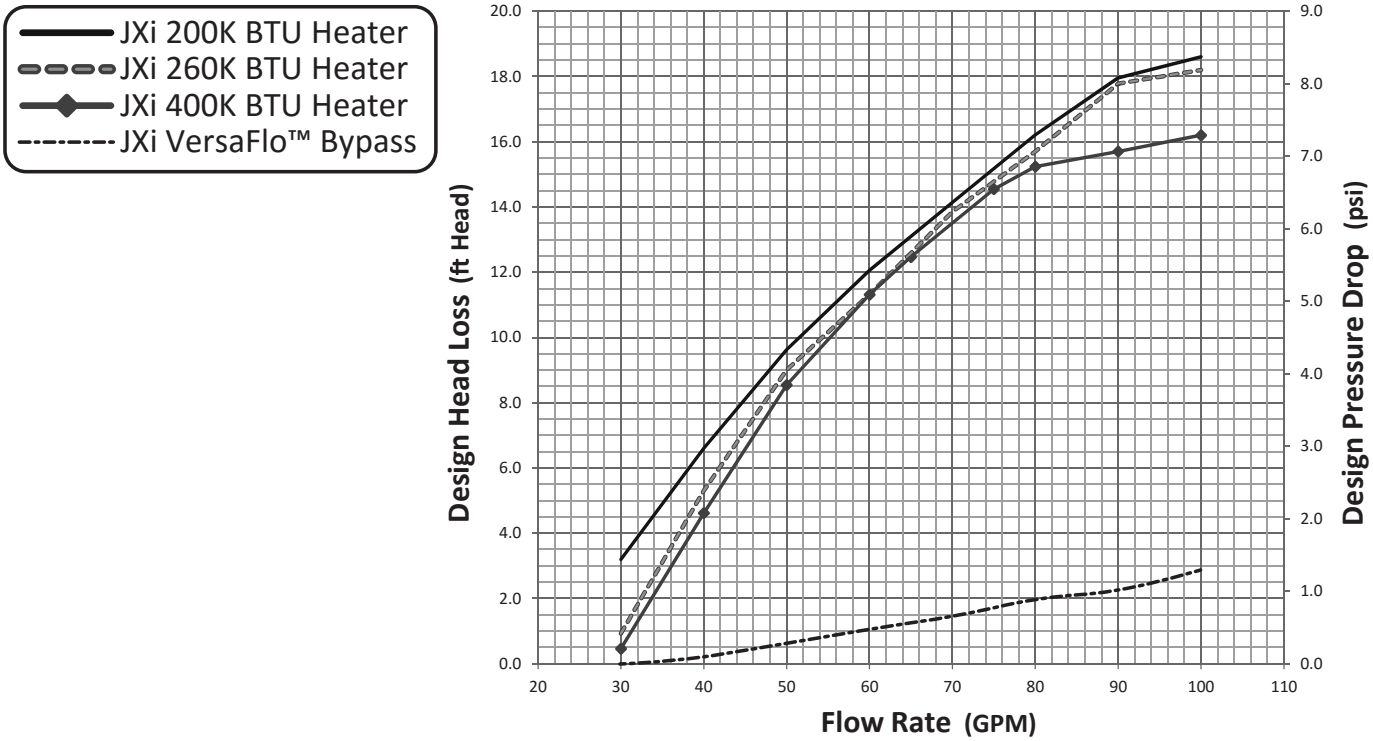

Figure 8. Head Loss Chart

5.1.1 Manual Bypass Valve

A manual bypass valve is to be installed in any system in which the pump flow exceeds 100 gpm to the heater.

- Connect ball valve between water inlet and outlet. See inset "a." in *Figure 7*.
- Adjust the valve to bring the flow rate within the acceptable range. See *Table 4*.
- Remove the valve handle to avoid tampering.

5.1.2 Pump Sizing for New Pool Construction:

When sizing a pump for the system, the head loss for all system components must be added together when determining the design flow rate. Component "Head Loss at Flow" curves are available from equipment manufacturers.

NOTE: In order to properly establish head loss at flow for a filter, remember that a "dirty" filter can typically add 10 psi of additional head loss (23 extra feet of head). This must be considered when sizing a pump for a new pool system.

5.1.3 Pump Sizing for Replacement in an Existing Pool:

If the JXi heater replaces a different model of heater, determine if the existing pump is capable of providing the minimum flow of 30 gpm. JXi heaters are high efficiency heaters. Heaters typical of this construction may have higher head loss characteristics than the one being replaced.

CAUTION

Heater failure due to insufficient water flow is not covered under warranty. See measurements in the Head Loss Chart. See *Figure 8*.

5.2 Plumbing Connections

The heater has a standard 2 inch water manifold and coupling design. With this feature, only nominal two inch PVC or CPVC may be connected to the heater. However, by installing appropriate pipe adapters and two-inch pipe (supplied by the installer), any size existing pipe may be fitted to the heater.

5.2.1 Reversing Plumbing Connections

The JXi heater is shipped with the manifold on the right side by default. If necessary the water connections can be orientated to the left side by rotating the top panel of the appliance.

NOTE: The electrical raceway, transformer, PIB, Ignition control and voltage selector board are all accessed through the default front panel. Special considerations should be made for service clearance, see *Figure 2*, before the final location and orientation of the appliance is determined.

- Turn off all power to the heater at the breaker.
- Ensure that the pump is off and will remain off for the duration of the procedure.

a Remove the four black screws securing the heater top panel to the heater body.

b Lift heater top panel. Be careful not to damage or apply undue stress to the user interface wiring.

c Rotate the heater top panel 180°.

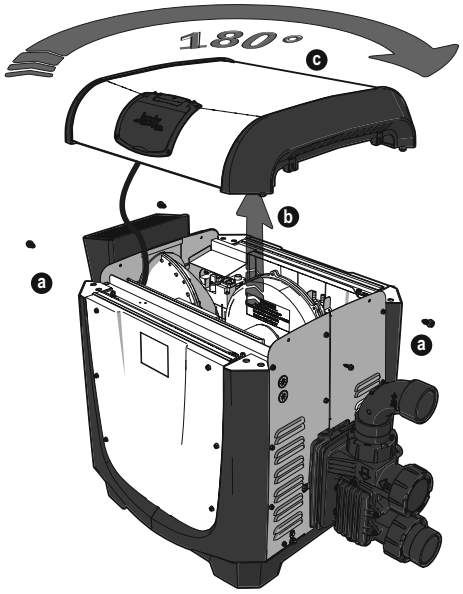

- Place heater top panel securely on heater body.
- Secure with the four screws removed in step “a”.
- Restore power to the heater.
- Return heater to normal operation.

5.2.2 Water Inlet Piping

There are two options for water inlet connections on the JXi. Both configurations use the same water outlet to return heated water to the pool. Be sure to check flow rates as outlined in *Section 5.1* and if necessary make provisions for and ensure sufficient space for the installation of a manual bypass valve as outlined in *Section 5.1.1*.

The top inlet is intended for use with the Jandy Versa Plumb® sweep elbow. Plumbing in this configuration can increase hydraulic efficiency particularly when used in a system with other Versa Plumb compatible Jandy Pro Series Equipment. See *Figure 9*.

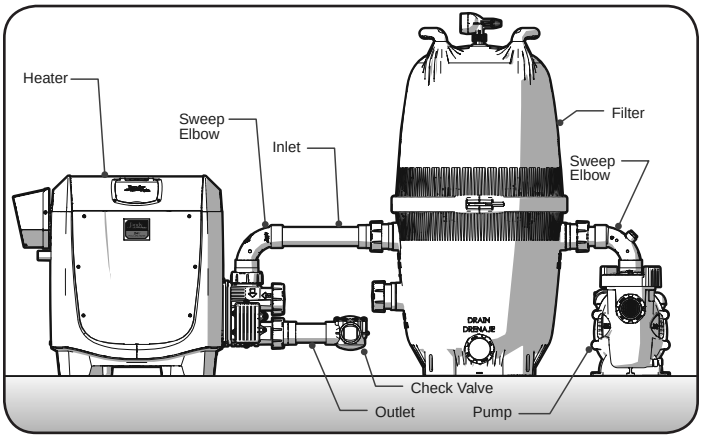

Figure 9. Versa Plumb Heater Inlet

The sweep elbow also provides the advantage of its exclusive interface with the Zodiac AquaLink® RS temperature sensor.

The side inlet is positioned at a 10 1/8” (255.7 cm) center height providing an ideal height for replacement unit or new construction plumbing.

- Turn off all power to the heater at the breaker.
- Turn off main gas supply to heater.
- Ensure that the pump is off and will remain off for the duration of the procedure.
- Do a dry fit test of cut pipe lengths in order to ensure proper seating of the union tailpiece and o-ring. Make adjustments to pipe length or positioning as needed.
- Clean all adhesion surfaces with an appropriate NSF® approved all purpose cleaner/primer.
- Slide the union nut onto the cut pipe length. or sweep elbow. Ensure proper nut orientation with threads directed towards the heater manifold. See *Figure 10*.
- Use approved NSF adhesive to glue the tailpiece onto the cut pipe, or sweep elbow.

NOTE: Zodiac Pool Systems, Inc. recommends Weld-On® 724TM PVC to CPVC Cement to glue Schedule 40 PVC.

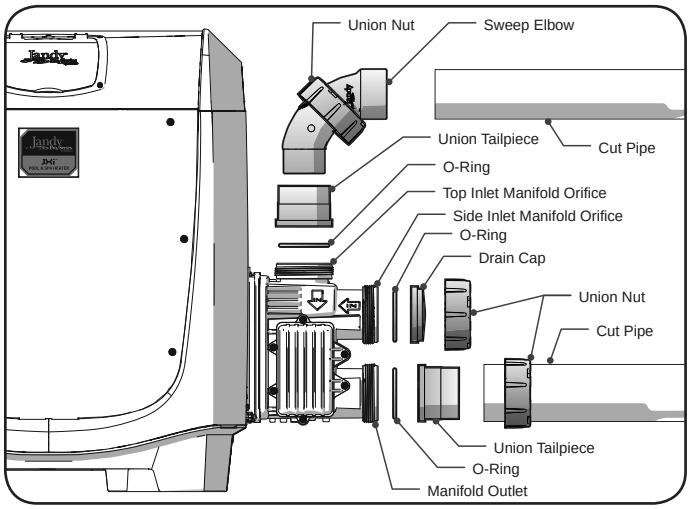

Figure 10. Inlet Piping

- Align Tailpiece and manifold orifice.
- Secure to manifold with union nut hand tight only. Do not overtighten. **Do not** use pipe joint or thread tape.
- If using the sweep elbow. Use approved NSF adhesive to glue the sweep elbow onto the cut pipe.
- Repeat the above steps for the manifold outlet. Again paying special care to ensure proper seating of the union tailpiece o-ring.
- Install the union nut and drain cap with o-ring at the unused inlet on the heater manifold. Be sure that the o-ring is properly seated. Secure hand tight only. Do not overtighten. **Do not** use pipe joint or thread tape.
- Return all valves to their operating positions.
- Restore power to the heater at the breaker.
- Turn on pump and inspect carefully for leaks.
- Restore main gas supply.
- Start the system and check for proper flow.
- Return heater to normal operation.

⚠ WARNING

To avoid an electrical shock hazard, which can result in serious injury or death, ensure that all electrical power to the system is turned off before approaching, inspecting or troubleshooting any leaking valves or plumbing that may have caused other electrical devices in the surrounding area to get wet.

Follow all filter manufacturer's instructions. Never attempt to assemble, disassemble or adjust the filter when there is pressurized air in the system. Starting the pump while there is any pressurized air in the system can cause the filter lid to be blown off, which can cause death, serious personal injury or property damage.

5.3 Water Pressure Switch Adjustment.

The water pressure switch is inside the heater jacket on the water connection side See *Section 1.8,* item "f".

The switch is preset at the factory for activation at 2 psi (14 kPa). The pressure switch setting must be adjusted If the heater is installed:

- Below the surface level of the pool
- More than two feet above the pool level
- Where the pressure is measured at 1 psi or greater with the filter pump off

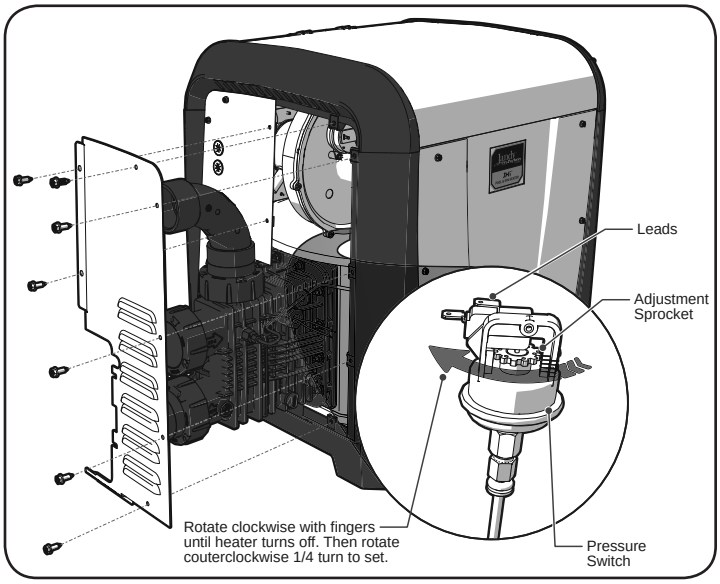

Figure 11. Water Pressure Switch Adjustment

Location of the heater above or below the pool water surface can also affect the operation of the switch. The factory installed switch can accommodate elevations of 6 feet above the pool water surface or 11 feet below pool water surface. If the heater water connections are outside this range Consult your local Zodiac® representative for recommendations.

- Set the heater control to "OFF".
- Remove seven screws securing the side panel to the heater body.
- Remove the side panel to gain access to the water pressure switch. See *Figure 11*.
- Turn the filter pump on and confirm that the pressure switch closes with a voltmeter.
- If the switch does not close, check that all valves are open to the heater and that there are no restrictions in the line. You may also need to confirm flow rate from your pump as outlined in *Section 5.1*.

CAUTION

The water pressure switch should be adjusted to turn the heater off when the pump is off. Setting the switch to close at too low flow can damage the appliance. Adjust the switch to turn the heater off, not on.

NOTE: It is recommended that a Pressure Release Valve (PRV) be installed prior to taking any of the steps below. Please see *Section 5.5* for details.

- Once an operational and correctly sized pressure switch has been confirmed, set the heater control to either POOL or SPA. Heater should start.
- With your fingers, turn the adjustment sprocket very slowly clockwise until the heater goes off.
- Slowly turn the pressure switch adjustment sprocket counterclockwise one-quarter turn. The heater should come back on. See *Figure 11*.
- Check the adjustment by turning the filter pump OFF. The burner should shut off immediately. If it does not, restart the filter pump and repeat the preceding step. Check the adjustment again. If you are still unable to successfully set your water pressure switch please contact your local Jandy distributor or call technical support at 800.822.7933. Additional information can be found at www.jandy.com.
- Return the temperature control to the desired temperature.

5.4 Check Valve Installation

When any equipment is located below the surface of the pool or spa, back-siphoning can occur, which can draw water backwards through the circulation system. This can be particularly concerning if chemically treated water is allowed to flow back into equipment such as heaters, filters and pumps. Make sure any chemical feeder or chlorination system outlet lines are downstream of the heater and a positive seal noncorrosive check valve is installed between the sanitation equipment and the heater. Always install a check valve if there is sanitation equipment installed in the system. **Do not** install any shutoff valve in the piping between the heater outlet and the pool.

⚠ WARNING

A check valve can interfere with the proper operation of certain Suction Vacuum Release System (SVRS) products. To avoid possible entrapment hazard, serious injury, or death, make sure to review the operation/owners manual of your particular SVRS product before installing the check valve.

5.5 Pressure Relief Valve Installation

A pressure relief valve (PRV) is recommended in all installations, and is mandatory in any installation in which the water flow can be restricted between the heater outlet and the pool/spa. A pressure relief valve may also be required by local codes. Be sure to check any applicable installation codes in your area to determine whether a pressure relief valve is required.

A pressure relief valve is not supplied with the JXi heater. However, Jandy does offer a PRV Kit # R0336101. The following instructions are for use with this kit only. All other equipment installations need to be in accordance with the manufacturers instructions.

The maximum working pressure of this heater is 50 psi. Be sure to take into consideration the maximum allowable pressure of the other components in the system when installing a PRV. Any pressure relief valve installed must comply with provisions of the standard described in ANSI® Z21.22 for the United Sates or CSA 4.4 in Canada.

5.5.1 Install pressure relief valve kit # R0336101

- Turn off the electrical power to the heater.
- Turn off the main gas supply to the heater.
- If the heater has been operating, ensure you allow enough time for remaining water in the heat exchanger to cool down before beginning. It is recommended that protective gloves be worn during the entire procedure.
- Make sure the filter pump is off and will remain off for the duration of the installation procedure.
- If the heater is below the surface level of the water in the pool or spa, close all shut-off valves between the heater and the pool.

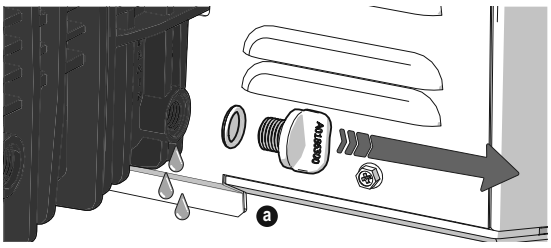

CAUTION

Use Teflon® tape only on the threads of the pipe nipple attachment to the plastic manifold. Do not use pipe compound or pipe dope on threads or any part that comes into contact with the plastic manifold. These compounds may damage the manifold over a period of time.

a Remove drain plug from manifold and allow all water to drain from heat exchanger.

b Locate the threaded boss on the outlet port of the manifold, and find the dimple at the center.

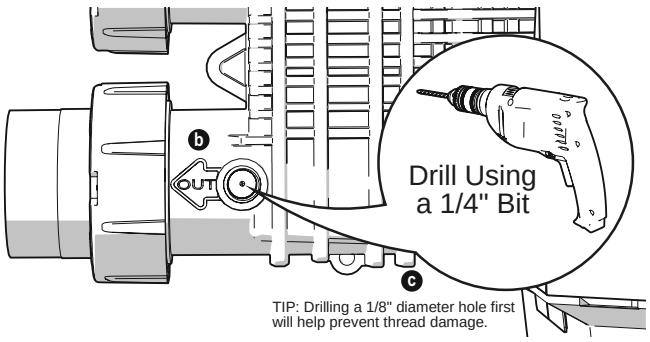

c Using the dimple to center the drill bit, drill a 1/4" diameter hole through the boss, taking care not to damage the surrounding plastic threads. TIP: Drilling a 1/8″ diameter hole first will help prevent thread damage.

d Each male connection should be first wrapped in 5-6 turns of Teflon® tape.

e Assemble the threaded nipple, reducing bushing, elbow and pressure relief valve. Make sure that all connections are snug. **Do not overtighten.**

f The final orientation of the pressure relief valve (PRV) will have the discharge opening facing away from the heater manifold.

g Wrap the open end of the nipple in 5-6 turns of Teflon tape.

h Install the pressure relief valve assembly at the heater manifold.

i Make sure to get a sung fit. Do not overtighten

j The final orientation of the pressure relief valve should be vertically aligned with the discharge opening facing away from the heater manifold.

k Install a discharge pipe from the pressure relief valve discharge opening to a safe area. This is a precaution to prevent the possibility of personal injury or property damage in the event scalding water is discharged from the pressure relief valve.

l Install the discharge pipe so that there is no trapped or standing water in the piping. Discharge piping must be facing down, terminating with a threadless nipple, no less than 6" from floor.

- Discharge piping must be open with no reducers or shut-off valves or other restrictions.
- To ensure the continued proper operation of the pressure relief valve, the valve should be tested once a year. To test, lift the lever with the circulation system running to ensure that water will pass through. When the lever is down, there should be no leaks from the outlet.

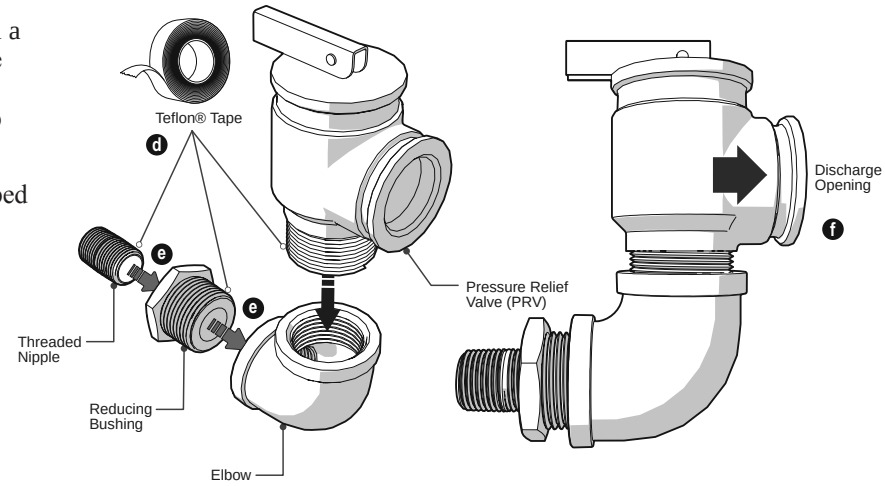

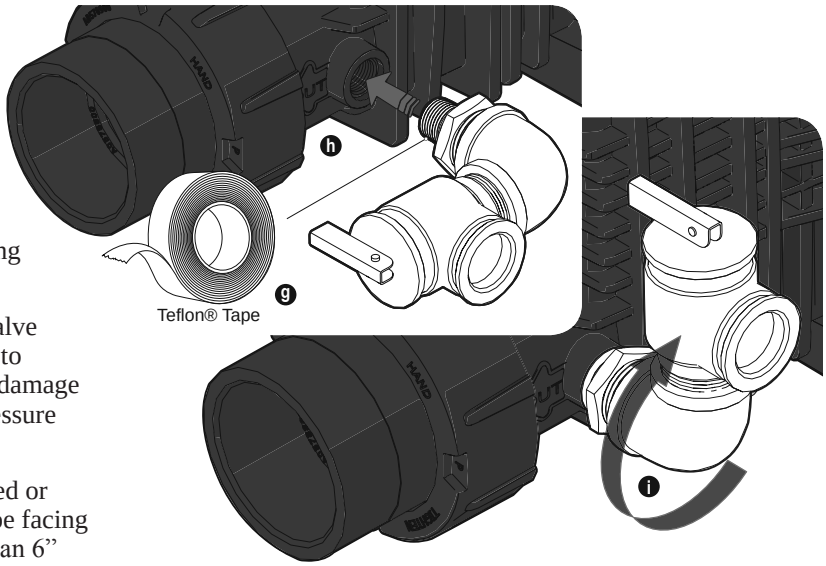

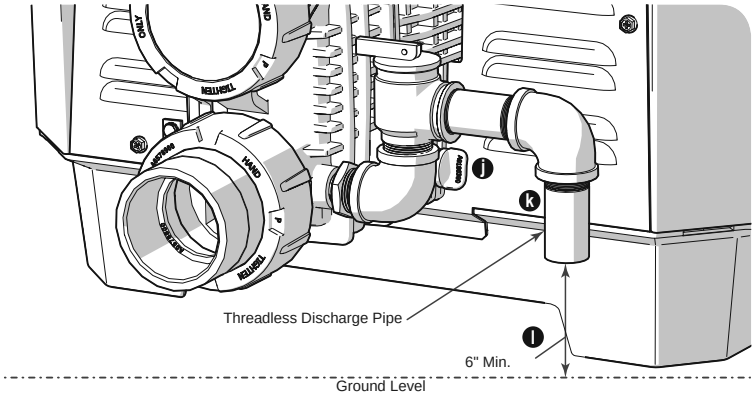

5.6 Auxiliary Components, Chlorinators, Ozone Generators, and Sanitizing Chemicals

The JXi heater is manufactured with materials that are not compatible with high concentrations of ozone, chlorine, bromine, or other sanitizing chemicals. Heater damages caused by improper water chemistry or plumbing configurations are not covered by the Zodiac Pool Systems, Inc. warranty. All questions should be directed to technical support at 800.822.7933. Additional information can be found at www.jandy.com. Be sure to adhere to the following:

- All sanitation equipment is to be installed as the last piece of equipment in the circulation system.
- When ozone is used, install a mixing degas chamber, to prevent ozone and air from entering the heater.
- When chemical feeders are used, install an in-line check valve between the heater and the feeder.
- Wire any electrical sanitation equipment so that it cannot operate unless the filter pump is running.
- Always follow pool chemical manufacturer's instructions when adding chemicals to pool.

Section 6. Electrical Connections

Wiring connections must be made exactly as shown in the wiring diagram found on the inside of the heater door. The NEC and CEC also require that the equipment and/or appliances associated with the pool water circulating system, including, but not limited to, pump motors and heaters, be bonded together as part of the equipotential bonding grid. Zodiac Pool Systems, Inc. provides a special labeled bonding lug on the manifold side of the heater to accommodate this requirement.

All electrical connections and wiring must be done by a certified electrician only. Electrical wiring must also be in accordance with the latest edition of the National Electrical Code® (NEC®), ANSI®/National Fire Protection Association® (NFPA®) 70, or in Canada, the Canadian Electrical Code (CSA® C22.1) unless local code requirements indicate otherwise.

The heater comes factory-wired for installation with 240 Volt, 60 Hz AC field electrical supply. If the use of 120 Volt, 60 Hz AC field electrical supply is required, You must first change the position of the voltage selector board on the power distribution board. See *Section 6.3* for details

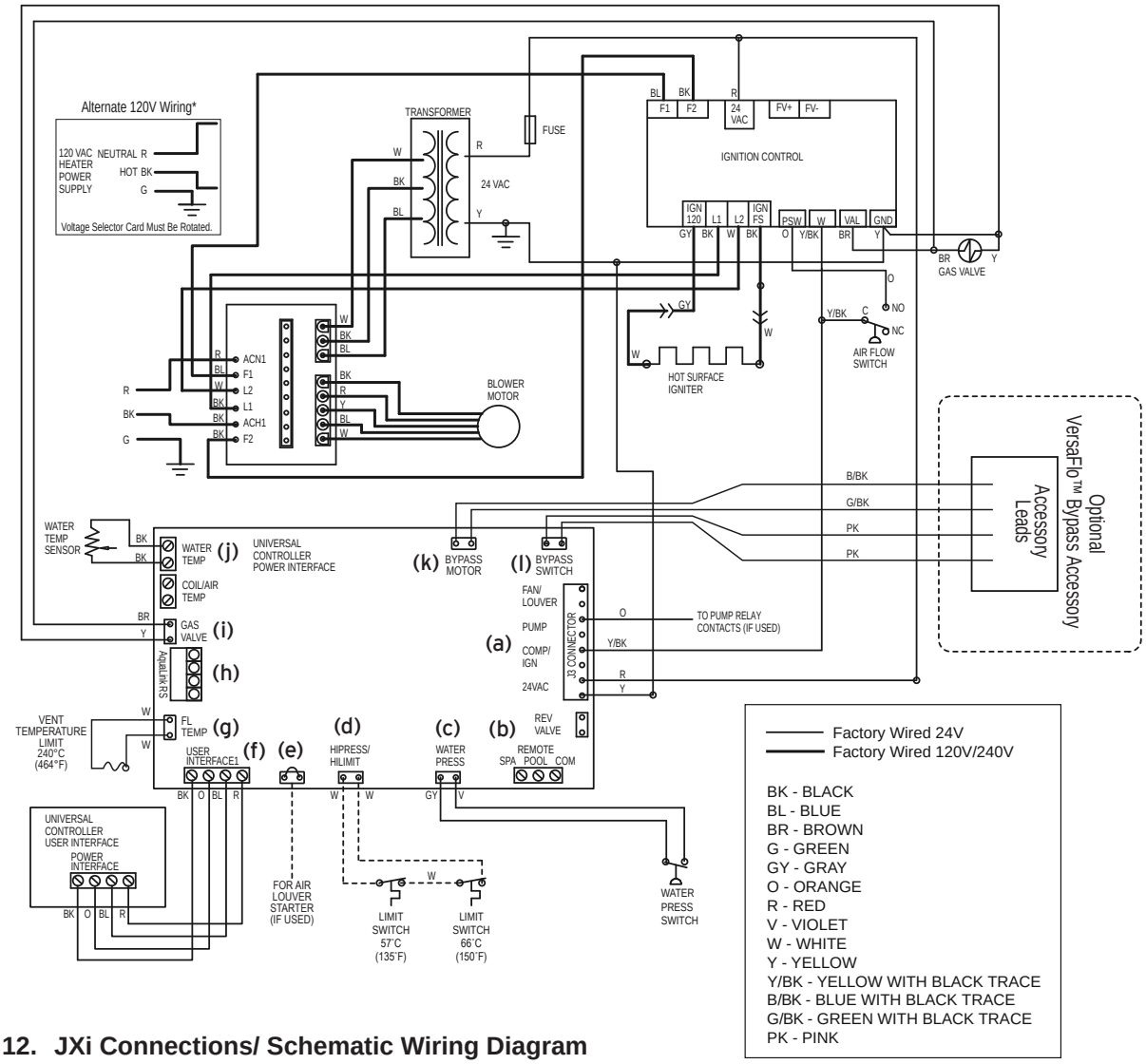

Figure 12. JXi Connections/ Schematic Wiring Diagram

⚠ WARNING

ELECTRICAL SHOCK HAZARD. This heater contains wiring that carries high voltage. Contact with these wires may result in severe injury or death.

CAUTION

Label all wires prior to disconnection when servicing controls. Wiring errors can cause improper and dangerous operation.

Verify proper operation after servicing.

6.1 Service Access

- Remove the four screws holding the front heater panel in place to expose the raceway.

a Locate the raceway lock release on the interior of the heater raceway.

b Using a screwdriver or comparable tool; press into the raceway release orifice until the raceway latch releases, and the raceway swings free.

c Secure the raceway in place by lifting until the locking latch engages.

d Push the tab on the locking latch to the left to release.

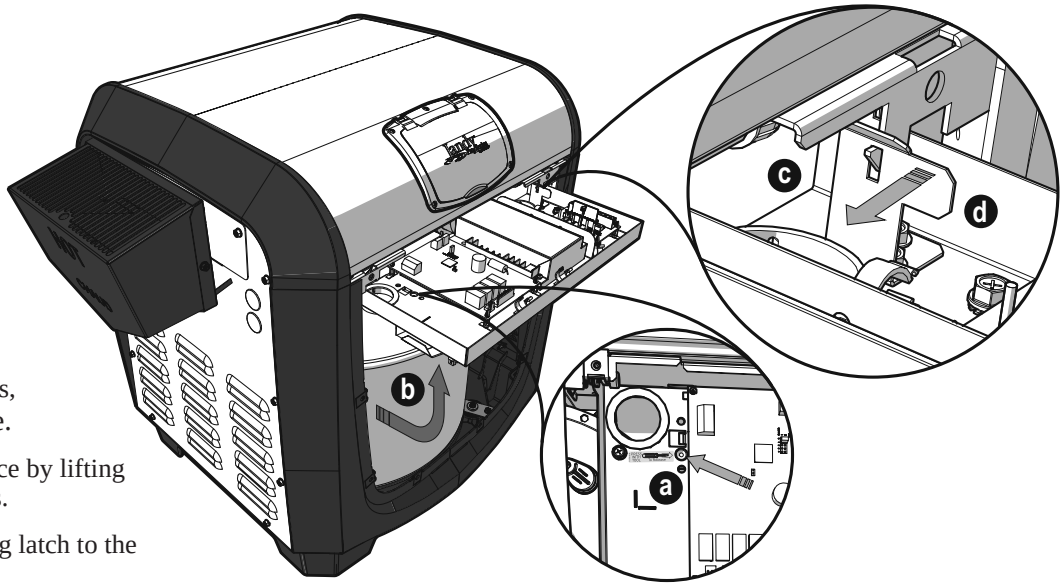

- Press raceway down and back until an audible click indicates that it is latched in position.
- Replace heater front panel.

NOTE: Before the raceway can be rotated for the first time a shipping zip tie must be cut. This zip tie is threaded at the raceway release point see item (a). While cutting this zip tie be sure not to damage or abrade any of the wires.

6.2 Main Wiring Connections

The main wiring connections should be available externally to the heater at the time it is unpacked. Use flexible conduit to run the main power lines from the power source to the heater connections. No external junction box is required.

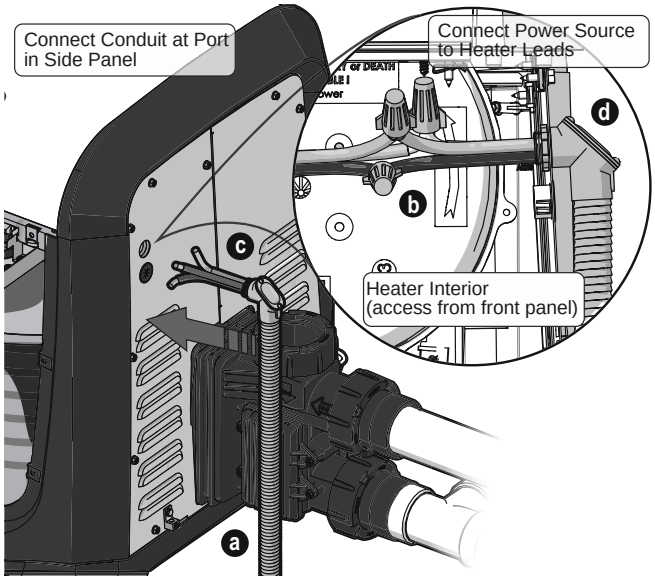

- Ensure that all electrical power is shut off to the heater at the breaker.
- Ensure that the filter pump is off and will stay off for the remainder of the procedure.
- Follow applicable service access instructions from *Section 6.1*.

a Run conduit and power lines from main power source to the heater side panel.

b Make wire connections via wire nuts.

c Push wire connections through the knockout into the heater body. Be careful not to damage or abrade any wiring during this procedure.

d Secure the conduit to the heater body panel at the knockout using a suitable conduit connector or elbow.

NOTE: If the heater is converted to accept 120V, the “Hot” wire of the 120V power supply has to be connected to the black wire (ACH1) on the power distribution board and the “Neutral” wire of the 120V power supply has to be connected to the red wire (ACN1) of the power distribution board.Please see *Figure 12* for details.

6.3 Input Voltage and Conversion

The heater comes factory-wired for installation with 240 Volt, 60 Hz AC field electrical supply. If the use of 120 Volt, 60 Hz AC field electrical supply is required, You must first change the position of the voltage selector board on the power distribution board.

- Ensure that all electrical power is shut off to the heater at the breaker.
- Ensure that the filter pump is off and will stay off for the remainder of the procedure.
- Follow service access instructions from *Section 6.1*.

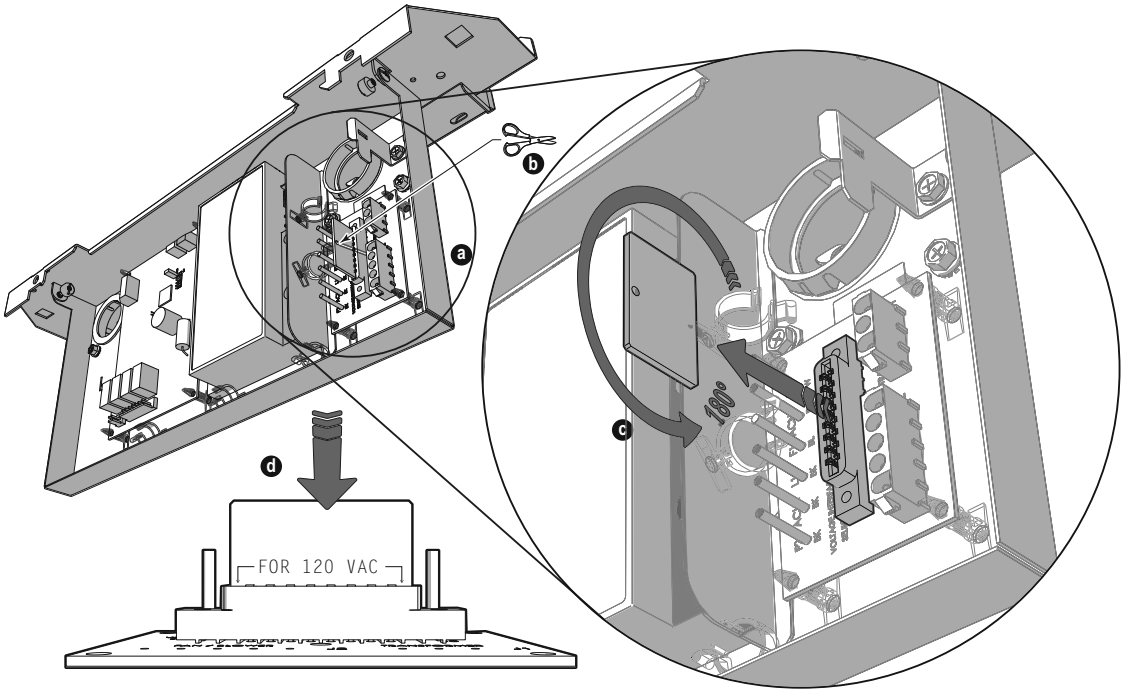

a Locate the power distribution board in the lower right hand section of the raceway.

b Using scissors, clip the zip tie securing the voltage selector board into the power distribution board.

c Remove and rotate the voltage selector board 180°. The printed message "FOR 120 VAC" will be displayed above the card connection pins.

d Reinstall voltage selector board.

NOTE: The voltage selector board is keyed so that it will fit in only one direction for either selected voltage (either side of the board).

⚠ WARNING

ELECTRICAL SHOCK HAZARD. To avoid an electrical shock hazard, which can result in serious injury or death, ensure that all electrical power to the system is turned off before approaching, inspecting, or troubleshooting any leaking plumbing that may have caused electrical devices in the surrounding area to get wet.

6.4 Bonding

Zodiac Pool Systems, Inc., requires that the appliance be connected to a "bonding loop" that includes all electrical equipment in the system and on the equipment pad. Bonding lugs must be connected with a solid copper wire at least 8 AWG (6 AWG in Canada) or larger. Failure to do so will void the Zodiac Pool Systems, Inc. warranty.

Additionally, in the United States the National Electrical Code® (NEC®) and in Canada the Canadian Electrical Code (CEC), require that all metallic components of a pool structure, including reinforcing steel, metal fittings and above ground components be bonded together (forming an "equipotential bonding grid") with a solid copper conductor not smaller than an 8 AWG (6 AWG in Canada).

CAUTION

To prevent premature failure of the appliance resulting from stray voltages and voltage differentials, the heater must be bonded to other equipment which is part of the pool plumbing system with a solid copper wire not smaller in diameter than 8 AWG (6 AWG in Canada).

Section 7. Optional Remote Controls

The JXi heater controls can be wired for remote operation. All Zodiac® AquaLink® Control Systems will permit the heater to be operated by remote control. The instructions in the following sections should be used as a general guideline only. Please follow the instructions that accompany your selected control system thoroughly.

If you are setting up a new pool or spa system, or if you have any questions about your heater control system, please call Jandy technical support at 800.822.7933.

Electrical wiring must be in accordance with the latest edition of the National Electrical Code (NEC), ANSI®/ National Fire Protection Association® (NFPA70®), unless local code requirements indicate otherwise.

Refer to *Figure 12* for a complete diagram of wiring connections and terminals.

Consult with Jandy Technical Support, 800.822.7933 for questions about installing non-Zodiac remote controls.

7.1 Connecting to a Remote Pool-Off-Spa Selector (3-Wire Connection)

- Turn off the power to both the pool/spa control system and the heater unit.
- Follow applicable service access instructions from *Section 6.1*.
- Run the wires from the pool/spa control system through the low voltage knockout on the right or left hand side of the heater.
- Connect the wiring from the pool/spa control system to the heater remote control terminal. See *Figure 12* item “b”.
- Connect the three wires to Spa, Pool & Common terminals of the J6 terminal bar.
- Reinstall front panel.
- Restore power to the heater and the pool/spa control system.

7.1.1 Configure the Control Panel:

- Make sure the pool heater is OFF.
- Press and hold MENU, then the POOL and SPA buttons for 5 seconds to access Service Setup mode.

NOTE: The display will revert back to OFF after 1 minute since the last key press.

- Press Up or Down to display REMOTE.
- Press MENU, **REMOTE OFF** (default remote) is displayed.
- Use Up or Down to scroll through the Remote options until **HI-LO-COM** is displayed, then press **MENU** to select.
- Press **POOL** or **SPA** to exit Service Setup mode.

7.2 Connecting to an AquaLink® Control System or Remote TSTAT (2-Wire Connection)

An interrupt (on/off-type) remote can be connected as a Remote TSTAT to turn the heater on or off but not perform any other function. When using this type of connection, remember to set the heater control to “pool” or “SPA” and set the thermostat control to maximum.

7.2.1 Install the Remote TSTAT:

- Turn off the power to both the pool/spa control system and the heater unit.
- Follow applicable service access instructions from *Section 6.1*.
- Run the wires from the pool/spa control system through the low voltage knockout on the right or left hand side of the heater.
- Connect the wiring from the pool/spa control system to the heater remote control terminal.
- Connect the two wires to Pool and Common (not Spa) on the J6 terminal bar. See *Figure 12* item “b”.
- Reinstall panel.
- Restore power to the heater and the pool/spa control system.

NOTE: If you install a time clock to control the filter pump operation, it is recommended that the time clock have its own low voltage (Fireman’s) switch to turn off the heater before turning off the pump. The switch should shut off the heater about 15 minutes before the filter pump shuts off. This will allow for a more efficient operation by removing any residual heat contained in the heat exchanger back to the pool.

CAUTION

To avoid damage to the heater, **do not connect the power supply of the heater to the output side of the clock** if your time clock simply interrupts the high voltage power supply or has a high voltage output. Doing so will prevent the blower from purging the residual heat from the heater when the heater turns off. The blower must be allowed to run for 45 seconds after the heater shuts off.

7.2.2 Configure the Control Panel:

- Make sure the pool heater is OFF.
- Press and hold MENU, then the POOL and SPA buttons for 5 seconds to access Service Setup mode.

NOTE: The display will revert back to OFF after 1 minute since the last key press.

- Press MENU, **REMOTE OFF** (default remote) is displayed.
- Use Up or Down to scroll through the Remote options until **REMOTE TSTAT** is displayed, then press MENU to select.
- Press POOL or SPA to exit Service Setup mode.
- Press POOL or SPA to adjust the set point to the maximum 104°F (40°C).

7.3 "Smart" Communication via RS-485

To provide "smart" communication between the JXi and a power center board (PCB) (AquaLink® RS, AquaLink PDA, and AquaLink Z4) through a red four-pin RS485 connector, your PCB must have the appropriate firmware. To determine the REV of the AquaLink RS PCB firmware in your system, refer to *Table 5*.

COMPONENTS	REV MMM OR EARLIER	REV N OR LATER
RS485 CONNECTORS	One (1) set of four (4)	Two (2) sets of four (4)
JVA SOCKETS 24 VAC	Located on top of board	Located on bottom of board
RELAY SOCKETS 24 VDC	10 total sockets. Eight (8) located on bottom, two (2) on top of board	11 total sockets. All located on bottom of board.

Table 5. AquaLink RS Power Center Board Identifying Features

If your PCB firmware is REV MMM or earlier:

Connect via a 2-wire connection. See *Section 7.2* for details.

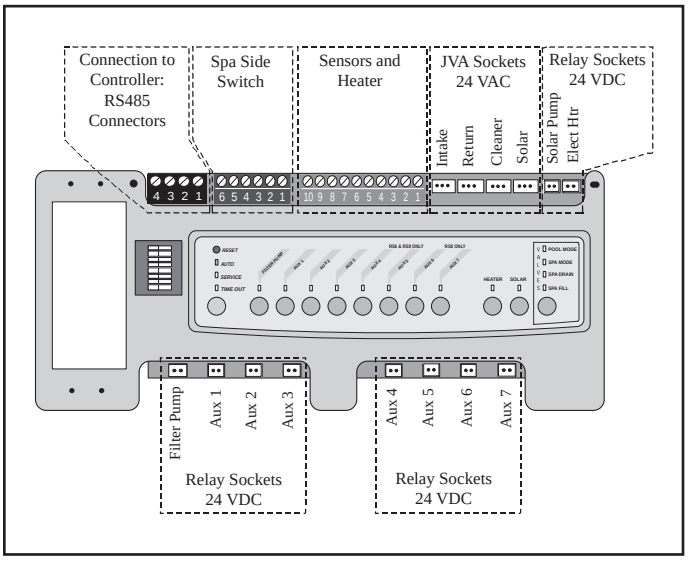

Figure 14. PCB with firmware REV MMM or lower

Do not connect more than two (2) wires to any of the terminals in the Control System when connecting peripheral devices. If connecting the heater to the control system creates this situation, then a Multiplex PCB Kit, which includes the Multiplex Board (part # 6584) must be used. Call Jandy Technical Support at 800.822.7933 with any questions.

NOTE: Only an AquaLink® RS System with firmware revision "N", or higher, will support the heater interface. Refer to *Table 5* along with *Figure 14* and *Figure 15* to determine the REV of your system's firmware. If it is "N" or higher, continue with these procedures. If it is MMM or lower, follow the procedures in Section *7.2* for connecting to a remote TSTAT.

NOTE: Only a PDA System with firmware revision 4.1, or higher, will support the heater interface.

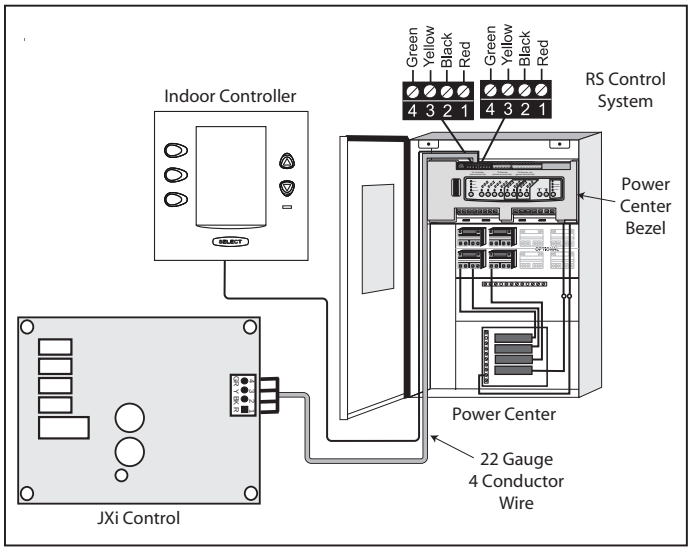

Figure 13. Wiring the JXi to a Zodiac® Remote

If your PCB firmware is REV N or higher:

- Turn off the power to both the heater and the controller.
- Open the power center enclosure and remove the front dead panel.

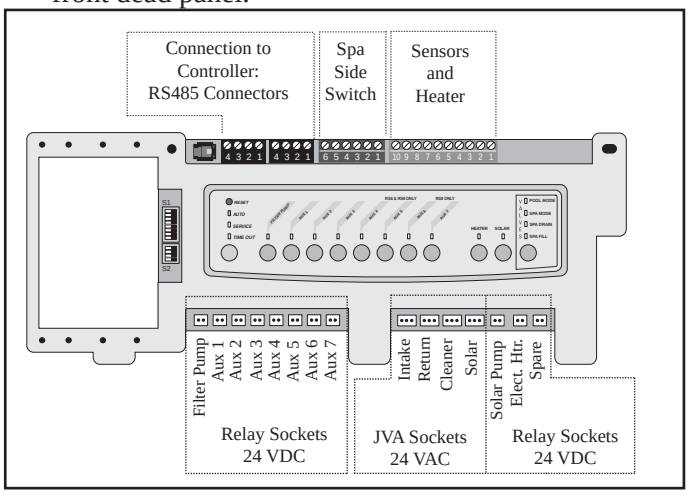

Figure 15. PCB with firmware REV N or higher

- Use 22 gauge 4-conductor wire to run between the heater and the RS control and match the wire color order. See *Figure 13*.
- The wires coming from the heater can be "doubled up" on the red terminal bar with the four wires from the indoor controller.
- Check all wiring, then apply power to both the heater and the control system. Verify operation in either Service or Auto mode. Refer to your Control System manual for operating instructions.

When the heater is connected to an external controller, all functionality of the heater control panel is disabled, therefore heater functions can be controlled only from the controller.

7.3.1 To Restore Heater Control Panel Functionality After Connecting to an External Controller

- Turn power to the heater ON. The heater display shows: **JANDY REMOTE ONLINE PUSH MENU TO DISABLE**.
- Press MENU to remove message and restore functionality to the heater control panel.

7.3.2 To Return Control Back to a Connected External Controller

- Turn power to the heater OFF then back ON.
- Press and hold MENU for 5 seconds to access Setup Mode.
- Choose **JANDY REMOTE**.

Section 8. Operating Instructions

Follow the instructions outlined below to start the heater. Refer to the Lighting and Shutdown Instructions label on the inside lid panel of the heater. See *Figure 17*

All questions should be directed to technical support at 800.822.7933. Additional information can be found at www.jandy.com.

⚠ WARNING

If you do not follow the instructions below exactly, a fire or explosion may result, causing property damage, personal injury or loss of life.

8.1 Important Safety Information

Read Before You Start:

- This appliance does not have a pilot light. It is equipped with an ignition device, which automatically lights the heater. Do NOT try to light the burners by hand.
- **BEFORE OPERATING**, smell all around the appliance for gas. Be sure to smell next to the floor because some gas is heavier than air and will settle on the floor.

8.1.1 What To Do If You Smell Gas

- Do not try to light any appliance.
- Do not touch any electric switch; do not use any phone in your building.
- Immediately call your gas supplier from a neighbor's phone. Follow the gas supplier's instructions.
- If you cannot reach your gas supplier, call the Fire Department.
- Use only your hand to switch on or off the gas control switch. Never use tools. If the switch appears broken or will not move, don't try to repair it, call a qualified service technician. Force or attempted repair may result in fire or explosion.
- Do not use this appliance if any part has been under water. Immediately call a qualified service technician to inspect the appliance and to replace any part of the control system which has been under water.

8.2 First-Time Start-Up Procedure

⚠ WARNING

Vent pipes and heater tops get hot! These surfaces can cause serious burns. Do not touch these surfaces while the heater is in operation.

Do not use this heater if any part has been under water. Immediately call a qualified service technician to inspect the heater and replace any part of the control system and any gas control which has been under water.

Should overheating occur or the gas supply fail to shut off, turn off the manual gas control valve to the heater.

Do not attempt repairs on the gas controls or appliance. Tampering is dangerous and voids all warranties

- Confirm that pool water is flowing normally through the pool system and equipment.
- If it is a new pool or spa installation, operate the filter pump with the heater off long enough to completely clean the water. This will remove any installation residue from the water.
- Clean the filter before starting the heater.
- Start the heater in either Pool or Spa mode. See *Figure 17*.
- Start the heater. See *Figure 17*.
- When the heater starts, confirm there is adequate water flow. See *Section 5* for details.

8.2.1 OPERATING INSTRUCTIONS

Refer to the Lighting and Shutdown Instructions. See *Figure 17* located inside the top panel.

- **STOP! Read IMPORTANT SAFETY INFORMATION in previous section.**
- Set temperature thermostat controls to their lowest setting and turn off the controller. Make sure the display shows GAS HEATER IS OFF.
- Turn off all electrical power to the heater at the junction box.

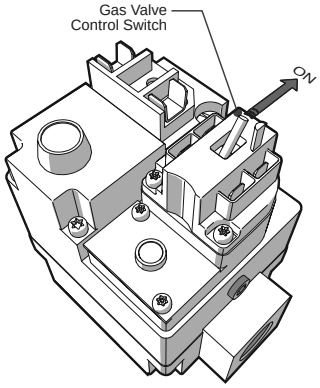

Figure 16. Gas Valve

- This appliance is equipped with an ignition device which automatically lights the heater. **Do NOT** try to light the burner by hand.
- Remove the heater rear or top panel.
- Toggle gas control switch to OFF position. See *Figure 16*.
- Wait five (5) minutes to clear out any gas, then smell for gas, including near the floor. IF YOU SMELL GAS, STOP! Follow instructions in Section *8.1.1*.
- If no gas is detected, toggle gas control switch to ON position.
- Replace the rear panel or top.
- Turn on electrical power to the heater.
- Turn the controller ON by pressing POOL or SPA and set the temperatures as necessary.
- **NOTE:** If the heater does not start, check that the filter pump is ON, the filter is clean and that water is flowing to the pool. If the heater still does not operate, follow the procedure in Section *8.3* to turn off gas supply to the heater.

⚠ WARNING

When the heater is fired for the first time, the combustion chamber refractory binder material is driven out by the heat of the flame. White smoke and/or sharp odors may be emitted from the vent during this period. Do not inhale combustion product fumes at any time, and especially when these fumes are being emitted. This “burn-in” period will last only a few minutes.

8.2.2 If Ignition Is Unsuccessful

If ignition is unsuccessful, or the flame fails during normal operation, the ignition control shuts off the gas valve. The heater will then go through a post purge process and attempt to establish stable combustion two additional times. If ignition is unsuccessful after three attempts, the system shuts down and will automatically attempt to restart after one hour.

- To reset the heater to provide three (3) attempts to start:
- Turn OFF the control then turn it back ON.
- Access either the Pool or Spa mode.

8.3 To Turn Off Gas To The Heater

- Set temperature thermostat controls to their lowest setting and turn off the controller. Make sure the display shows GAS HEATER IS OFF.
- Turn off all electrical power to the heater at the junction box.
- Remove the rear panel or top.
- Toggle gas control switch to OFF.
- Shut off the external gas supply valve to the heater.
- Replace the rear panel or top.

8.4 Normal Operation

During normal operation, the control system measures the temperature of the water flowing through the heater and will begin the start-up process if the temperature is below the set point. If the blower pressure switch senses adequate airflow when the blower starts, the ignition sequence begins. Following a pre purge, the igniter is energized, then the gas valve opens. As long as a flame is sensed at the burner, operation continues until the temperature of the water entering the heater reaches the temperature control setting.

FOR YOUR SAFETY READ BEFORE OPERATING

⚠ WARNING **If you do not follow these instructions exactly, a fire or explosion may result, causing property damage, personal injury, or death.**

(A) This appliance does not have a pilot light. It is equipped with an ignition device which automatically lights the heater. Do NOT try to light the burners by hand.
(B) BEFORE OPERATING, smell all around the appliance for gas. Be sure to smell next to the floor because some gas is heavier than air and will settle on the floor.

WHAT TO DO IF YOU SMELL GAS

- Do not try to light any appliance.
- Do not touch any electric switch; do not use any phone in your building.
- Immediately call your gas supplier from a neighbor's phone. Follow the gas supplier's instructions.
- If you cannot reach your gas supplier, call the Fire Department.

(C) Use only your hand to activate the gas control switch. Never use tools. If the switch will not move by hand, do not try to repair it. Call a qualified service technician. Force or attempted repair may result in fire or explosion.
(D) Do not use this appliance if any part has been under water. Immediately call a qualified service technician to inspect the appliance and to replace any part of the control system which has been under water.

OPERATING INSTRUCTIONS

1. **STOP! Read the safety information above on this label.**
2.* **Set the thermostat to lowest setting and turn appliance switch to OFF.**
3. **Turn off all electric power to the appliance.**
4. **This appliance is equipped with an ignition device which automatically lights the heater. Do not try to light the burners by hand.**
5. **Remove the top panel.**
6. **Turn gas control switch to OFF position**
7. **Wait five (5) minutes to clear out any gas. Then smell for gas, including near the floor. If you smell gas, STOP! Follow "B" in the safety information above on this label. If you don't smell gas, go to next step.**
8. **Turn gas control switch to ON position.**
9. **Replace the top panel.**
10. **Turn on all electric power to appliance.**
11.* **Set thermostat to desired setting and switch appliance from OFF to either POOL or SPA.**
12. **If the appliance will not operate, check that the filter pump is on, the filter is clean and water is flowing to the pool. Otherwise, follow the instructions "To Turn Gas Off" and call your service technician or gas supplier.**

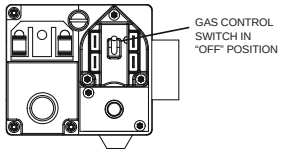

TO TURN GAS OFF

(1) Remove top panel.

(2) * Set the thermostat to lowest setting and switch appliance to OFF.

(3) Turn off all electrical power to the appliance if service is to be performed.

(4) Turn gas control switch to OFF posititon.

(5) Replace top panel.

*** See manual for details of operation and thermostat control.**

POUR VOTRE PROPRE SÉCURITÉ LISEZ CECI AVANT D'UTILISER LE CHAUFFE-EAU

⚠ AVERTISSEMENT **Si vous ne suivez pas ce directives à la lettre, un incendie ou explosion peut en être le resultat. Ceci causera des dommages aux biens des blessures personnelles ou la mort.**

(A) Cet appareil n'est pas muni d'une veilleuse. Il est muni d'un appareil d'allumage qui déclenche le chauffe-eau automatiquement. Ne pas esssayer d'allumer les brûleurs à la main.
(B) AVANT DE METTRE EN MARCHE, assurez-vous qu'il n'y a aucune odeur de gaz autour de l'appareil. Assurez-vous qu'il n'y a aucune odeur de gaz près du plancher, car certains gaz sont plus lourds que l'air et on pour effet de s'accumuler au plancher.

QUOI FAIRE S'IL Y A UNE ODEUR DE GAZ

- Ne pas essayer de mettre en marche quelque appareil que ce soit.
- Ne touchez à aucun interrrupteur électrique. Ne pas faire usage d'un appareil téléphonique dan votre édifice.
- Contactez immediatement à partir du téléphone d'un voisin votre fournisseur de gaz. Suivez ses directives
- Si vous ne pouvez pas joindre avec votre fournisseur de gaz, appelez le service des incendies.

(C) Utilisez seulement votre main pour opérer le bouton de la commande de gaz. Ne jamais utiliser un outil. S'il est impossible d'opérer le bouton à la main, n'essayez pas de le réparer. Appelez un technicien de service qualifié. L'utilisation d'une force quelconque peut avoir pour résultat un feu ou une explosion.
(D) Ne pas utiliser cet appareil si une pièce quelconque a ete submergé. Contactez immediatement un technicien qualifié afin de faire examiner l'appareil et faire remplacer toute piece du système de contrôle ainsi que toute commande de gaz qui aurait été submergé.

MODE D'EMPLOI

1. **ARRÊTEZ ! Lisez les directives de sécurité ci-dessus sur cette étiquette.**
2.* **Réglez le thermostat au plus bas et mettez la commande de l'appareil à la position OFF .**
3. **Éteignez toute alimentation électrique de l'appareil.**
4. **Cet appareil est muni d'un dispositif d'allumage qui met le chauffe-eau en marche automatiquement. Ne pas essayer d'allumer les brûleurs à la main.**
5. **Enlevez le panneau supérieure.**
6. **Tournez l'interrupteur de commande de gaz jusqu'à la position ON.**
7. **Attendez pendant cinq (5) minutes afin que le gaz se dissipe. Assurez-vous qu'il n'y a aucune odeur de gaz, même au niveau du plancher. S'il y a une odeur de gaz ARRÊTEZ-VOUS ! Suivez l'étape « B » ci-dessus. S'il n'y a pas d'odeur de gaz, procédez à la prochaine étape.**
8. **Tournez le l'interrupteur de commande de gaz jusqu'a la position OFF.**
9. **Replacez le panneau supérieure.**
10. **Mettez l'appareil sous tension.**
11.* **Réglez le thermostat comme désiré et tournez le bouton de commande de la position OFF à la position POOL ou SPA .**
12. **Si l'appareil ne se met pas en marche, assurez-vous que la pompe du filtre fonctionne, que le filtre soit propre et qu'il y a un débit d'eau vers la piscine. Autrement suivez les directives.**

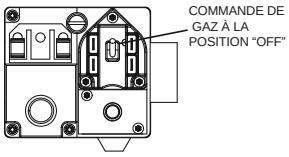

INTERRUPTION DE L'ALIMENTATION EN GAZ

(1) Enlevez le panneau supérieure.

(2) * Règlez le thermostat au plus bas et mettre le bouton de commande à OFF.

(3) Interrompez toute alimentation électrique a l'appareil si on doit faire de l'entretien ou réparation.

(4) Tournez l'interrupteur de commande de gaz jusqu'à la position OFF.

(5) Remplacez le panneau supérieure.

*** Voir le manuel pour les détails concernant l'opération du contrôle de thermostat.**

H0415400_REVD

Figure 17. Lighting and Shutdown Instructions Label on Top Panel

8.5 Operating the Controller

Unless the heater is connected to a remote controller, all operations are set up and programmed through the control panel on the top of the heater. See *Figure 18*.

NOTE: The display light reverts to OFF after two minutes of inactivity since the last key was pressed.

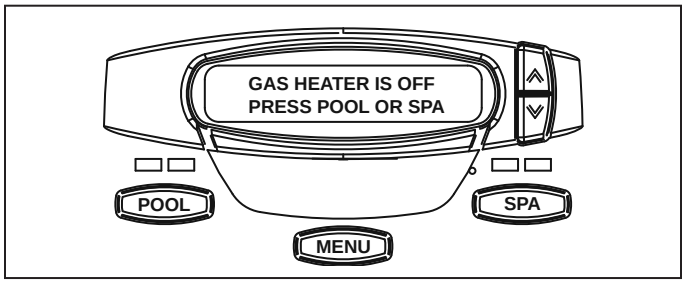

Figure 18. Main Control Panel

8.5.1 Setting up Heater Options

Before using the heater for the first time, set up the following options:

- **Languages**: Set a display language
- **Temperature Scale**: Set temperatures to be displayed in either Celsius or Fahrenheit scale
- **Display Light Timeout**: Set the display light to turn off after a specific interval of inactivity
- **To Program the Display Language**

  Heater must be in OFF mode to begin.

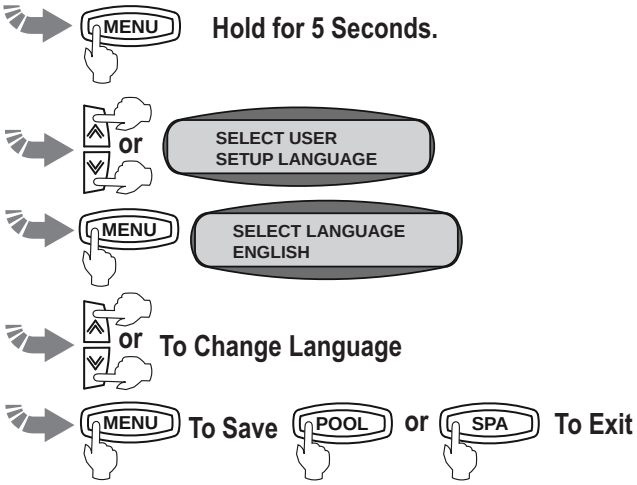

- **To Program the Temperature Scale (F or C)**

  Heater must be in OFF mode to begin.

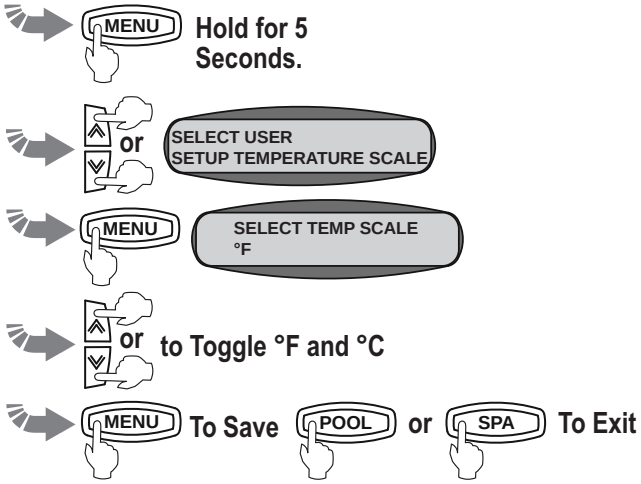

- **To Program Display Light to Turn Off Automatically**

  Heater must be in OFF mode to begin.

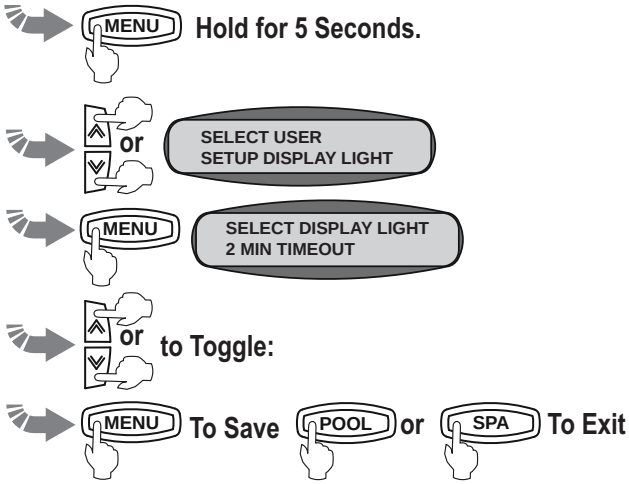

8.5.2 Operating the Heater

- **To Turn on Pool or Spa Heat**

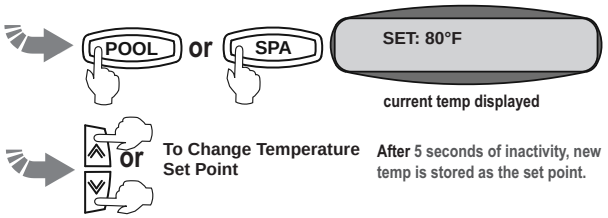

- **To Maintain Pool or Spa Heat (optional Relay and Wiring Required)**

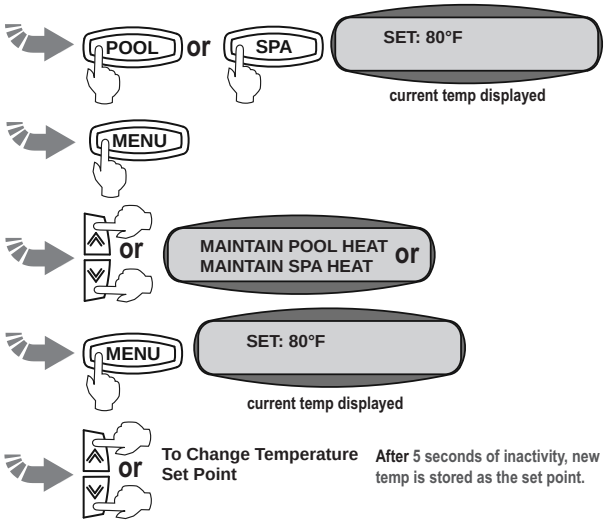

If connected, the Maintain Heat mode monitors the pool water temperature 24 hours a day by turning the pool pump on and sampling the water temperature. When the water temperature drops below the programmed temperature set point, the controller automatically starts heating the pool.

- **To Turn the Heater Off**

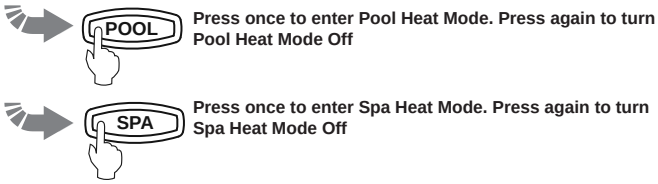

When the control panel is OFF, the screen displays: **GAS HEATER IS OFF PRESS POOL OR SPA**.

- **Temperature Set Point Lock**

Once you have programmed pool temperature and spa temperature set points, you can lock them so that they may not be changed inadvertently.

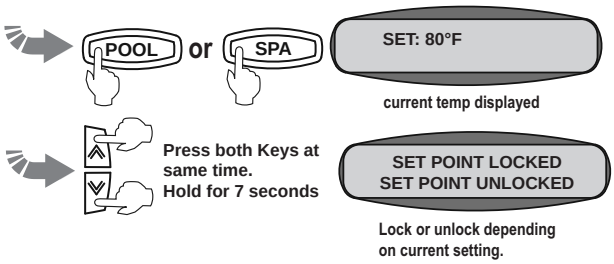

8.6 Shutting Down the Heater

Complete shutdown instructions are as follows. Refer to *Figure 17*.

- Set temperature thermostat controls to their lowest setting and turn off the controller. Make sure the display shows OFF.
- Turn off all electrical power to the heater at the junction box.
- Remove the top panel of the heater.
- Turn the gas valve control switch to OFF.
- Shut off the external gas supply valve to the heater.
- Replace the top panel.

Section 9. Maintenance

If the heater is not going to be used for an extended period of time and in colder climates, shut it down completely. See *Section 8.6 and Figure 17*.

IMPORTANT MAINTENANCE NOTE

We recommend that before each pool season, the Thermal Regulator Valve (TRV) be inspected for proper operation and replaced if there are signs of scaling or corrosion.

Corrosion and scaling are the result of improperly balanced water please see *Section 9.1.1* for complete details on managing your water chemistry.

The TRV ensures the heater operates at it's optimal efficiency and if properly maintained will extend the life of the heater.

⚠ WARNING

Do not operate the heater if the water temperature is below 40 °F (4°C)

9.1 Water Chemistry

Proper Water Balance is the key to the enjoyment of your pool or spa experience and to the long life of your heater.

The pH of your pool or spa's water is one of the factors that has the most impact on indicating how properly balanced the water is. The other factors are: temperature, total alkalinity, calcium hardness and total dissolved solids. Cold water is typically more acidic (corrosive), while hot water tends to lead to a scale forming (basic) condition. While the heater is in operation, if the PH is allowed to rise above 7.8 and the calcium hardness and total alkalinity are not properly maintained; calcium in the water could lose solubility, coating the copper tubes inside the heat exchanger. This will restrict the flow of water resulting in reduced efficiency and possible damage to the heater.

If the pH is allowed to drop below 7.2, and the alkalinity is not properly maintained, the water will become more acidic. Acidic water has a tendency to dissolve metal components in the pool plumbing such as copper tubing in the heat exchanger.

9.1.1 Saturation Index

PH, Total Alkalinity (TA), temperature, Calcium Hardness and Total Dissolved Solids (TDS) play a role in whether the water is either corrosive or scale forming. These factors are combined in the Langelier Saturation Index, which is a method for determining whether or not water is properly balanced. See *Table 6* below.

Saturation Index = pH + AF + CF + TF -12.1*

A-Factor=(AF), C-Factor=(CF), T-Factor=(TF)

Total Alkalinity			Calcium Hardness			Temperature		
A-Factor			C-Factor			T-Factor		
PPM		Factor Value	PPM		Factor Value	°F		Factor Value
5	=	0.7	5	=	0.9	32	=	0.0
25	=	1.4	25	=	1.0	37	=	0.1
50	=	1.7	50	=	1.3	46	=	0.2
75	=	1.9	75	=	1.5	53	=	0.3
100	=	2.0	100	=	1.6	60	=	0.4
150	=	2.2	150	=	1.8	66	=	0.5
200	=	2.3	200	=	1.9	76	=	0.6
300	=	2.5	300	=	2.1	84	=	0.7
400	=	2.6	400	=	2.2	94	=	0.8
800	=	2.9	800	=	2.5	105	=	0.9

A saturation index of 0 is perfectly balanced

A negative saturation index has corrosive tendencies

A positive saturation index has scaling tendencies

A saturation index of +0.3 or -0.3 is ideal

*-12.1 should be changed to -12.2 if Total Dissolved Solids (TDS) measure at 1,000 ppm or greater

Table 6. Water Saturation Index

The practice of putting tablet-based sanitizer in the skimmer basket can produce heavily chlorinated water with very low pH. If this comes in contact with metal parts of the heater it can cause serious damage. Practices like this should be discontinued.

If acidic conditions are present, there could be signs of metal in the pool water that could cause staining on the floor of your pool. This might manifest itself in the form of brown stains on the finish of your pool bottom or pool water discoloration. Your local pool dealer can test for metals in your water or can provide you with a test kit.

Every effort should be made to maintain the water balance of your pool or spa in the proper range. Ignoring this very important component of your pool's water chemistry can make the water less enjoyable to bathe in and result in permanent damage to your heater and/or complete failure of individual components.

Zodiac Pool Systems does not warrant heat exchangers damaged by corrosive water issues or from the build-up of calcium in the heater's heat exchanger. Any questions regarding proper water balance can be directed to our product support line at Zodiac® or to your local pool dealer.

NOTE: The Thermal Regulator Valve (TRV) is an indicator of how well the water balance is being maintained. The TRV should be inspected before each pool season to ensure it is clean and operating properly. If you see signs of calcium buildup (scale-forming or base water) or corrosion (acidic water) the TRV should be replaced and your water balanced.

9.2 Swimming Pool Energy Saving Tips

Please review the following recommendations to help conserve fuel and minimize the cost of operating your pool heater without sacrificing comfort.

- The American Red Cross® recommends a maximum water temperature of 78°F (26°C). Use an accurate pool thermometer. A difference of 4°F (2°C), between 78°F and 82°F (26°C and 28°C), will use as much as 40% more gas.
- Carefully monitor the water temperature of your pool in the summertime. You can reduce heater usage due to warmer air temperatures.
- Find the proper setting on the pool heater temperature control and use the Set Point Lockout feature to discourage further adjustments.
- Set the pump time clock to start the pump no earlier than 6:00 AM. This is the time when nightly heat loss balances.
- If the pool is only going to be used on weekends, reduce the heater temperature control setting by 8 or 10 degrees during the week. Reset it to the 78°F (26°C) level a day or so before you plan to use the pool.
- During the winter or when on vacation for longer than a week, shut down the heater by following the shutdown instructions found in *Section 8.6 and Figure 17*. and on the inside of the heater.
- Where possible, shelter the pool from prevailing winds with well-trimmed hedges or other landscaping, cabanas, or fencing.
- The greatest source of heat loss in a swimming pool is through evaporation. It can account for 50% of pool systems total heat loss. The use of solar blankets, automatic covers or anything that limits the air's access to the surface of the water will help reduce this heat loss and minimize evaporation.

9.3 Winterizing

In areas where freezing temperatures occur in winter and the pool or spa will not be used, the pool should be winterized by a qualified pool service technician:

- Turn off the electrical supply and the main gas supply to the heater.
- Remove the heater access panel.
- Turn off gas supply to the heater following the shut-down instructions. See *Section 8.6 and Figure 17*.
- Remove the drain plug from the inlet/outlet header and completely drain the heater before the first frost. See *Section 5.5.1* step "a"
- Inspect the gasket on the drain plug. Store the drain plug in a safe place for winter.
- Cover the exhaust vent grill with plastic so that snow will not accumulate and freeze on top of the combustion chamber.
- Remove and drain the copper tubing (siphon loop) for the water pressure switch.

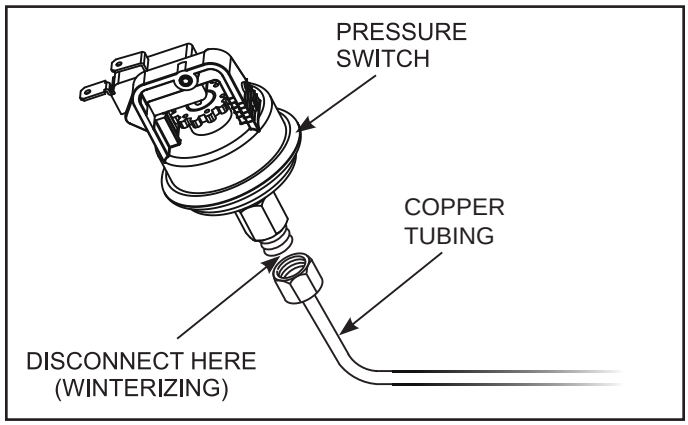

Figure 19. Water Pressure Switch Copper Tubing (Siphon Loop)

9.4 Spring Start-up

When winterized, the heater should be reassembled by a qualified professional technician in the Spring.

- Reinstall the drain plug.
- Uncover the vent grill.
- Reattach copper tubing to water pressure switch.
- Make sure power is supplied to the pump.
- Turn on the filter pump and circulate water through the heater for 5 minutes. Check for leaks while circulating.
- Turn on the main gas supply to the heater at the gas cock outside the heater jacket.
- Turn on the heater according to *Section 8.6 and Figure 17*.

9.5 Inspection and Service

⚠ WARNING

Improper installation or maintenance can cause nausea or asphyxiation from carbon monoxide in flue gases which could result in severe injury, or death.

The heater is designed and constructed to provide long performance life when installed and operated properly under normal conditions. Periodic inspections, especially at spring start-up, are important to keep your heater running safely and efficiently through the years. Zodiac Pool Systems, Inc. recommends that the homeowner inspect the heater on a regular basis (especially after abnormal weather conditions), and arrange to have a professional inspection at least once a year by a qualified service technician.

⚠ WARNING

For your safety, when starting the heater, keep your head and face away from the exhaust grill opening and blower inlet grill to prevent any risk of personal injury. Make sure all doors/panels are securely in place and stand back from the heater.

9.5.1 Guidelines for Homeowner Inspection:

⚠ WARNING

Do not store or use gasoline or other flammable vapors, liquids or chemicals in the vicinity of this or any other appliance.

⚠ WARNING

Do not use this heater if any part has been under water. Immediately call a qualified service technician to inspect the heater and replace any part of the control system and any gas control which has been under water.

- Keep the top of the heater, under the heater, and surrounding area clear of all debris and combustible materials such as paper, leaves, etc.
- If there is a pressure relief valve, check for corrosion in and around the valve. If there is corrosion, turn off the filter pump and replace the pressure relief valve.
- Once a year check that water is running freely through the pressure relief valve. To check, turn on the filter pump and lift the release lever on the top of the valve.
- Be sure combustion air and ventilation openings are not blocked.

9.5.2 Guidelines for Professional Inspection:

The following inspections should be made once a year or as needed. Routine inspections are a critical to the safety and long life of your Jandy pool equipment.

- Check for loose or broken wires and terminal connections.
- Check the water pressure switch by turning the filter pump off and on several times. The burner should go off immediately after the pump stops. The fan will run for 45 seconds after the burner shuts down.

CAUTION

If the heater is wired serially to or on the same relay as the filter pump, there is a chance that power will be disconnected to the heater before the fan is able to fully purge the combustion chamber. It is inadvisable to install the heater in a manner which would prevent this combustion chamber purge from taking place.

- An ignition sequence should start shortly after the pump is turned back on.
- Inspection the thermal regulator valve (TRV).
- Inspect the electrical controls, specifically:
  a. High limit switches
  b. Water pressure switch
  c. Automatic gas valve
  d. Power interface/Temperature control
  e. Flue temperature sensor
  f. Control circuit fuse
  g. Ignition control
  h. Air pressure switch
- Inspect the inlet grill at the blower for blockage, leakage, and corrosion.
- Inspect the combustion blower for damage.
- Conduct a normal operating cycle and observe that the sequence proceeds as intended.
- If the heater is equipped with a pressure relief valve, clean any accumulated corrosion and make sure that water runs freely when lever is lifted.
- Inspect combustion chamber and blower exterior for corrosion and indication of improper operation.
- Inspect electrical controls for deterioration. Repair and replace as necessary.
- Visually check the main burner flame. Remove the top of the heater to inspect the sight glass. See *Figure 20*

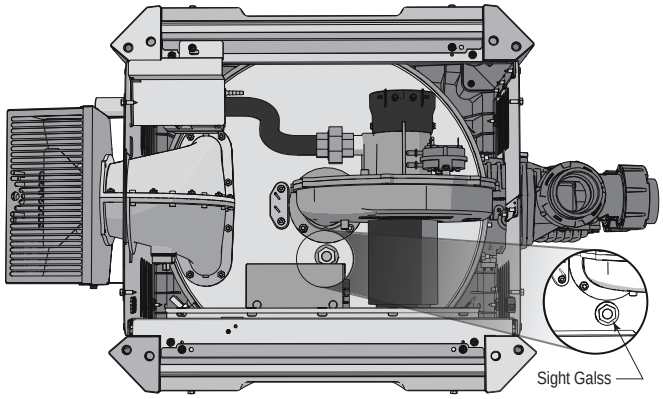

View With Heater Top Panel Removed

Figure 20. Remove Heater Top to View Sight Glass

Section 10. Troubleshooting

10.1 Common Problems

Zodiac Pool Systems, Inc. strongly recommends that you call a qualified service technician to perform all service and repairs on the heater. To locate a licensed or qualified technician service company, call Jandy Technical Support at 800.822.7933, or visit www.jandy.com.

The following table lists some of the most common problems when running the heater. Most problems occur when the heater is started for the first time after installation or at spring start-up.

Symptom	Possible Cause	Remedy
Pump not operating	• No power. • Pump defective. • Incorrectly wired. • Time clock settings not synchronized with actual time.	• Check circuit breakers and power source. • Replace the pump. • Recheck wiring. • Check time clock setting.
Unstable combustion- **(1) heater turns off and on** **(2) heater ignites slowly** **(3) flame lifts and goes out** **(4) short yellow streaked flame**	• Wrong gas. • Lean fuel/air mixture— low supply pressure. • Lean fuel/air mixture— too much combustion air. • Rich fuel/air mixture— high manifold pressure. • Rich fuel/air mixture— too little combustion air.	• Make sure the gas supply matches the gas type indicated on the rating plate. • Correct gas supply inlet pressure to: - (NATURAL GAS) 4.0 “ W.C. min - 10.5” W.C. max - (PROPANE) 4.0 “ W.C. min - 14.0” W.C. max • Offset pressure should be -0.2” W.C. Use a digital differential manometer to verify correct offset pressure. Adjust offset pressure as needed. See *Section 4.3* • Connect a digital differential manometer to blower throat and gas valve port to obtain differential. Make sure the differential value falls within the specified range for the heater size. See *Section 4.3* • Gas meter too small. • Gas line from meter to heater too small. • Check blower inlet grill for obstruction.
Not enough heat **(1) heater is slow to heat up** **(2) heater not maintaining set temperature** **(3) Low temperature rise**	• Heater size inadequate. • Filter pump not running long enough. • Thermal regulator valve (TRV) is opening early or is permanently open. • Heater plumbed backwards.	• Replace with heater of higher output. • Replace TRV. • Heater is condensing. Flue product moisture will condense at the start-up until the heater water temperature reaches the normal operating conditions. • Correct the plumbing.
Heater pounding or knocking	• Water flow through heater too low. • Failed Thermal Regulating Valve (TRV).	• Look for obstruction or closed valve in system. • Check for damaged internal bypass. • Variable speed pump set too low • Dirty filter or baskets
Igniter lights but heater does not fire	• Gas valve is not ON. • Air in gas line. • No power to gas valve. • Low gas pressure/volume. • High burner throat pressure. • Gas valve failed.	• Flip the switch to “on” position. • Cycle ignition sequence until air is out of the gas line. • Check controls for proper operation. • Check supply pressure/volume and verify proper gas supply pipe size. • Replace gas valve. **NOTE:** Gas valve failures are extremely rare. Please confirm this as the root problem before replacing.

10.2 Service Diagnostic Messages

The controller monitors several functions of the heater. In the event of a malfunction, the controller will display a FAULT message. The following table lists the Heater Service Messages along with potential causes and remedies.

Fault Message	Possible Cause	Remedy
CHECK FLOW	• Pump is not running. • Low pump pressure. • Pressure switch fault. • Variable speed pump set too low.	• Check breakers and power source, recheck wiring, set time clock and current time. • Clean filter or clear blockage, check position of valve in plumbing system. • Make sure return eyeball fittings are installed on the wall of the pool • Adjust or replace pressure switch. • Adjust variable speed pump. • Refer to qualified service personnel.
FAULT- HIGH LIMIT	• Water temperature in heater exceeds the internal limit. • Limit switch fault.	• Inspect vent for obstructions or blockages. • Indoor installations, check vent pipe for bird, insect or rodent activity that could cause a blockage. • Replace switches. • Refer to qualified service personnel.
FAULT - HIGH FLUE TEMPERATURE	• Flue temp limit fault	• Identify and correct loose connections. • Replace flue sensor. • Refer to qualified service personnel.
FAULT- CHECK IGN CONTROL	• Broken, split, pinched or disconnected air pressure switch tubing. • Fan not operating. • Fan running slow or premature fan failure. • Air flow restricted at intake or discharge. • Broken igniter. • Low gas supply pressure/volume. • No flame at burner.	• Check tubing and replace if necessary. • Correct fault or replace fan. • Replace igniter. • Verify proper wiring for 120 VAC or 240 VAC. • Check for proper clearances around heater and for adequate room ventilation if enclosed. Inspect for blockage or restriction at discharge of flue. • Check ignition control LED codes (see Section *10.3*, Ignition Control LED Service Codes). • Verify that the size, length and number of elbows on the gas supply line meet national codes. • Identify and correct loose wiring connections, or problems with igniter, gas valve, or ignition control. • Refer to qualified service personnel.
FAULT- SHORTED H2O SENSOR or **FAULT- OPEN WATER SENSOR**	• Faulty wiring or connection. • Failed water temperature sensor.	• Inspect water temperature sensor wiring. • Ensure sensor is connected correctly into the power interface board (PIB). • Replace water temperature sensor. • Refer to qualified service personnel.
FAULT- PUMP	• Status message indicating the filter pump is currently turned OFF when the heater system programmed in Maintain Temp mode.	• **No Service Required**. This is normal when the control is in a **Maintain Temp** mode.

10.3 Ignition Control LED Service Codes

In addition to service diagnostic messages, the ignition controller has an LED light that flashes to indicate various ignition control faults. The table below lists the LED codes and the corresponding fault description. To diagnose possible cause and remedy, refer to *Section 10.2*, Service Diagnostic Messages.

LED Code	Fault Description
The LED light is on continuously.	Ignition Control Fault. Refer to qualified service personnel.
LED single flash.	Air flow fault.
LED double flash.	Flame exists when there is NO call for heat. Refer to qualified service personnel.
LED triple flash.	Ignition lockout (heater has made three (3) unsuccessful attempts to fire and is in a soft lockout condition).

Section 11.Professional Service and Maintenance

Call a qualified service technician to perform all service and repairs on the heater. To locate a licensed or qualified technician or independent service company in your area, contact Zodiac Technical Support at:

1-800-822-7933
www.jandy.com

Before servicing the heater:

- Confirm that the heater control is set to either **POOL** or **SPA**
- Confirm the temperature set point for either Pool or Spa is set high enough to make the heater operate given the current water temperature.

⚠ WARNING

SERVICING SAFETY

Service procedures can be hazardous because they involve fuel gas, electricity, moving parts and procedures which require testing or temporary bypass of safety controls. For this reason, the heater must be serviced only by a qualified professional service technician.

IMPROPER SERVICE HAZARD

The heater incorporates unique design features. Incorrect service of this heater can result in personal injury or damage to property. To avoid such hazards, the heater must be serviced only by a qualified professional service technician.

Section 12. Spare Parts

Using genuine Zodiac factory replacement parts helps to ensure the ongoing quality and reliability of our products.

Unauthentic parts might seem okay on the surface, but they often fall short of factory standards, and they typically lack the backing you get from an established, global manufacturer like Zodiac. Plus, the use of unauthentic parts voids all factory warranties.

Zodiac does not sell parts directly to pool owners, so when it's time for maintenance, please see your local Preferred Professional Provider (PPP) of genuine parts. You can find a PPP at www.zodiacpoolsystems.com/parts.

NOTE: To identify the correct part, you will need to know the model number, serial number and type of gas when applicable. This information can be found on the rating plate sticker, which is located inside the heater on the outside of the combustion chamber.

12.1 Major Components

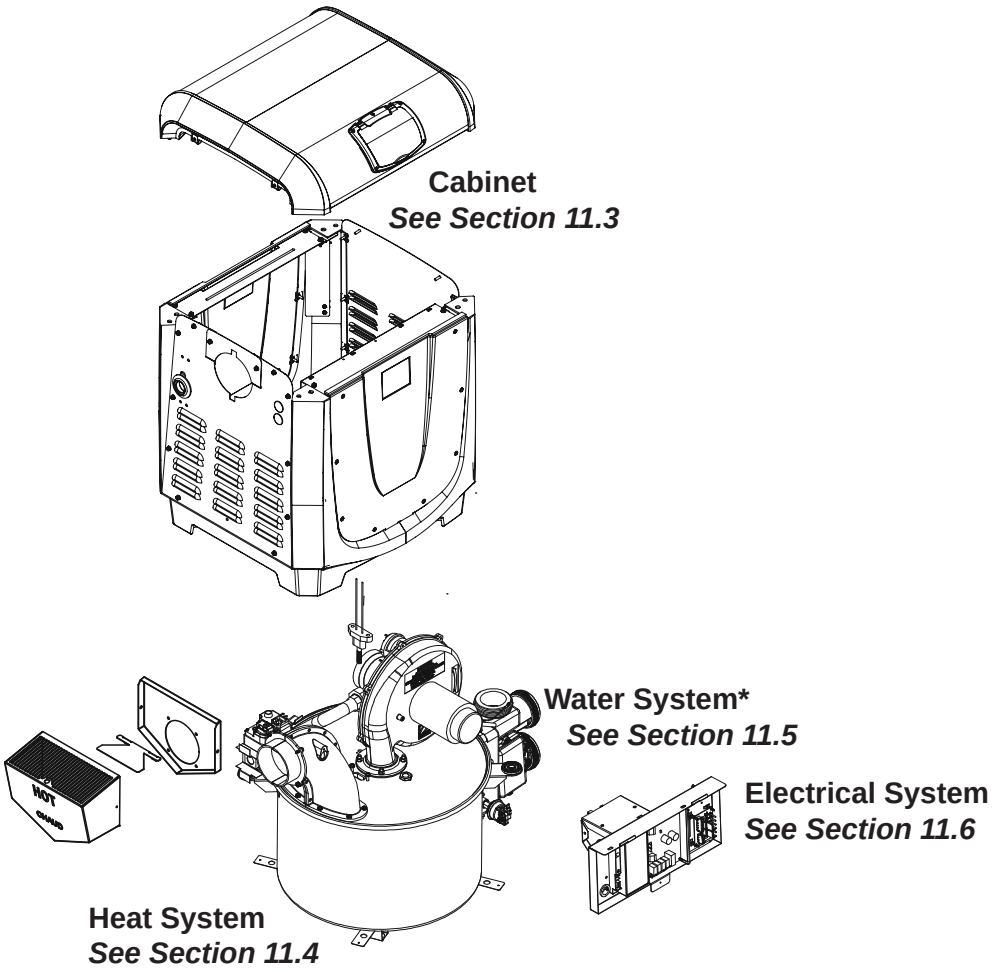

12.2 Cabinet Assembly Spare Parts List and Exploded Parts Diagram

Key No	Description	model 200	model 260	model 400
1	Heater Jacket Top Kit (no User Interface)	R0592400	R0592400	R0592400
2	Corner Post Kit, Left/Right (set of 2)	R0592500	R0592500	R0592500
3	Heater Base Kit	R0592600	R0592600	R0592600
4	Front or Back Panel Kit	R0592700	R0592700	R0592700
5	Side Panel Kit*	R0592900	R0592900	R0592900
6	Vent Terminal Housing Kit	R0593100	R0593100	R0593100
7	Jacket Hardware Kit (speed nuts, screws, jacket clips)	R0593300	R0593300	R0593300
8	Anchor Brackets Kit (set of 4)	R0593400	R0593400	R0593400
9	Jacket Hole Plug Kit	R0591800	R0591800	R0591800
10**	Complete Replacement Box Packaging Kit	R0593600	R0593600	R0593600

*Includes: Exhaust side panel, top panel closure, anti rotation bracket and access door.
Header side panel LH, Header side panel RH.
** Not Shown

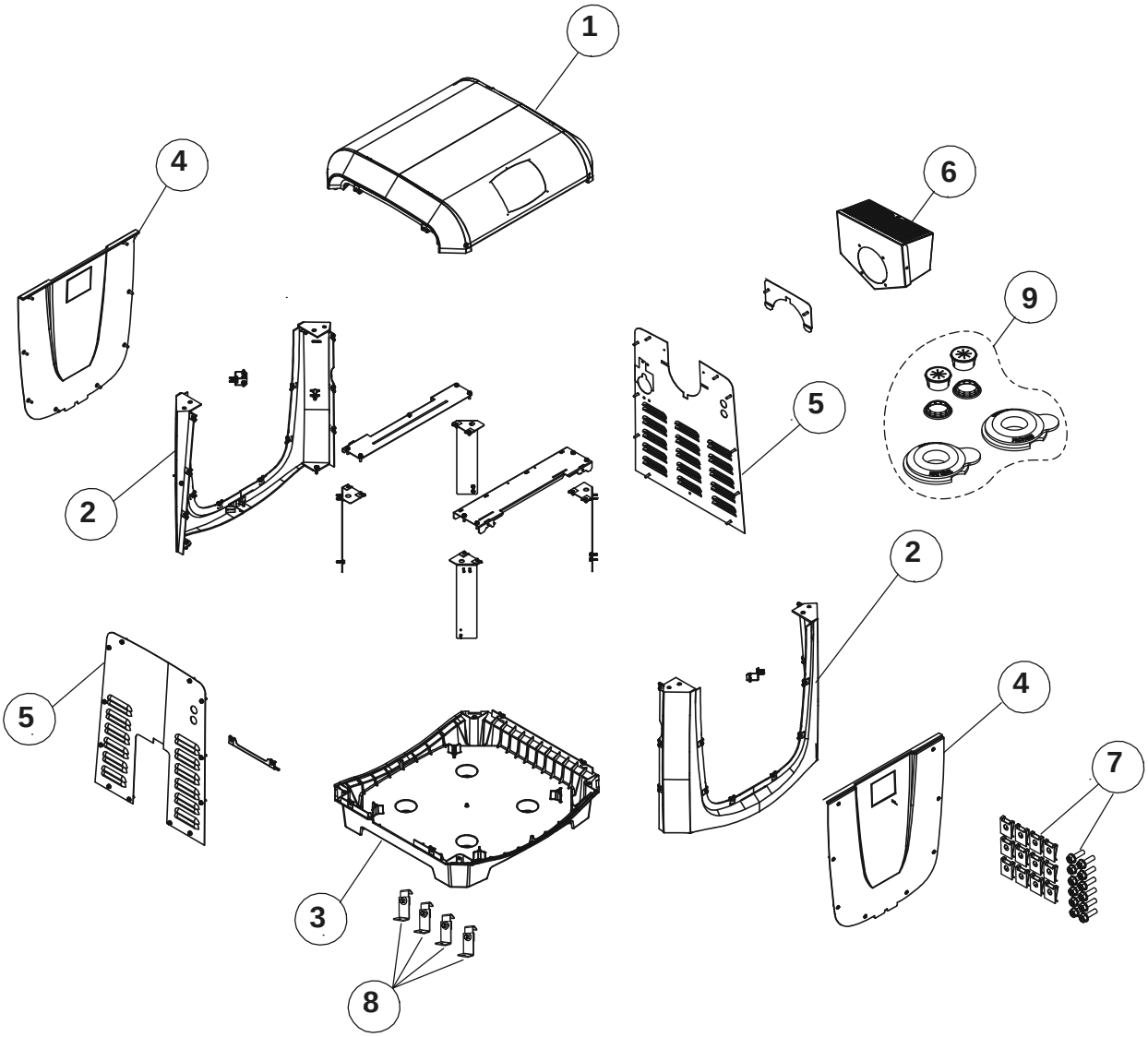

12.3 Heat System Spare Parts List and Exploded Parts Diagrams

The following JXi Models are equipped with a Cupronickel (CuNi) heat exchanger.

- JXI260NN
- JXI400NN
- JXI260PN
- JXI400PN

12.3.1 Combustion Chamber Assembly

Key No	Description	model 200	model 260	model 260 CuNi	model 400	model 400 CuNi
1	Exhaust Elbow Assembly Kit	R0590200	R0590200	R0590200	R0590200	R0590200
2	Band Clamp Kit	R0590400	R0590400	R0590400	R0590400	R0590400
3	Refractory Kit, Internal	R0590500	R0590500	R0590500	R0590500	R0590500
4	Combustion Chamber Shelf (set of 2: Models 200, 260)	R0590700	R0590700	R0590700	N/A	N/A
5	Combustion Chamber Lid Kit	R0590800	R0590800	R0590800	R0590800	R0590800
6	Gasket Kit	R0590900	R0590900	R0590900	R0590900	R0590900
7	Sight Glass Kit	R0305400	R0305400	R0305400	R0305400	R0305400
8	Ignitor Kit	R0457502	R0457502	R0457502	R0457502	R0457502
9	Insulation Kit, External	R0591000	R0591000	R0591000	R0591000	R0591000
10	Isolator Kit (Thermal)	R0593200	R0593200	R0593200	R0593200	R0593200
11	Heat Exchange Assembly	R0589402	R0589403	R0746903	R0589405	R0746905

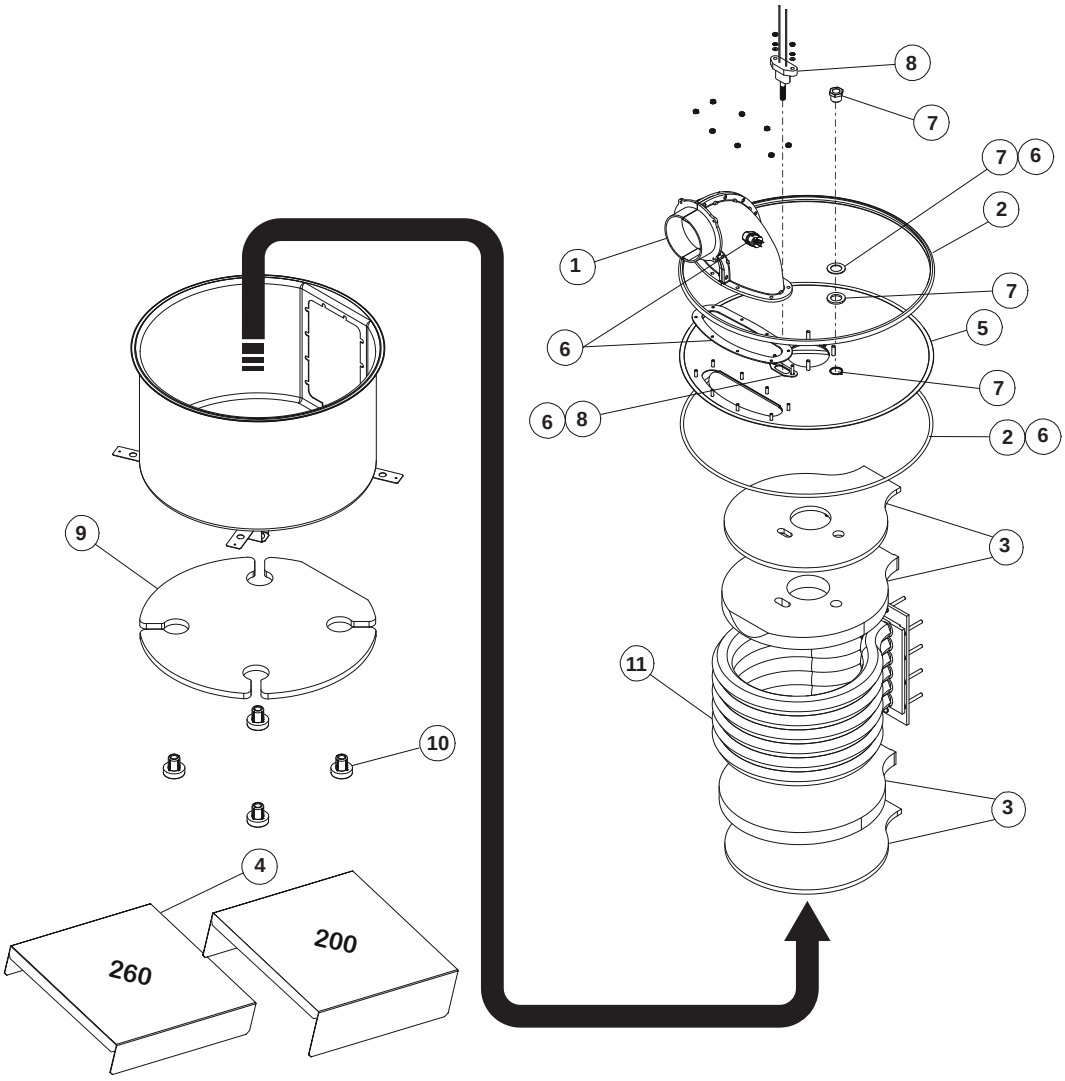

12.3.2 Burner Assembly

Key No	Description	model 200		model 260		model 400	
		*N	**LP	N	LP	N	LP
1	Blower Assembly Kit	R0591100	R0591100	R0591100	R0591100	R0591100	R0591100
2	Air Intake Grate Kit	R0591200	R0591200	R0591200	R0591200	R0591200	R0591200
3	Blower Intake Orifice Kit	R0591302	R0591312	R0591303	R0591313	R0591305	R0591315
4	Fuel Orifice Kit	R0591601	R0591605	R0591602	R0591606	R0591604	R0591608
5	Gas Valve	R0591400	R0591400	R0591400	R0591400	R0591400	R0591400
6	Burner Kit	R0591702	R0591702	R0591703	R0591703	R0591705	R0591705
7	Capacitor Kit	R0614500	R0614500	R0614500	R0614500	R0614500	R0614500

*** N - Natural Gas**
****LP - Liquid Propane**

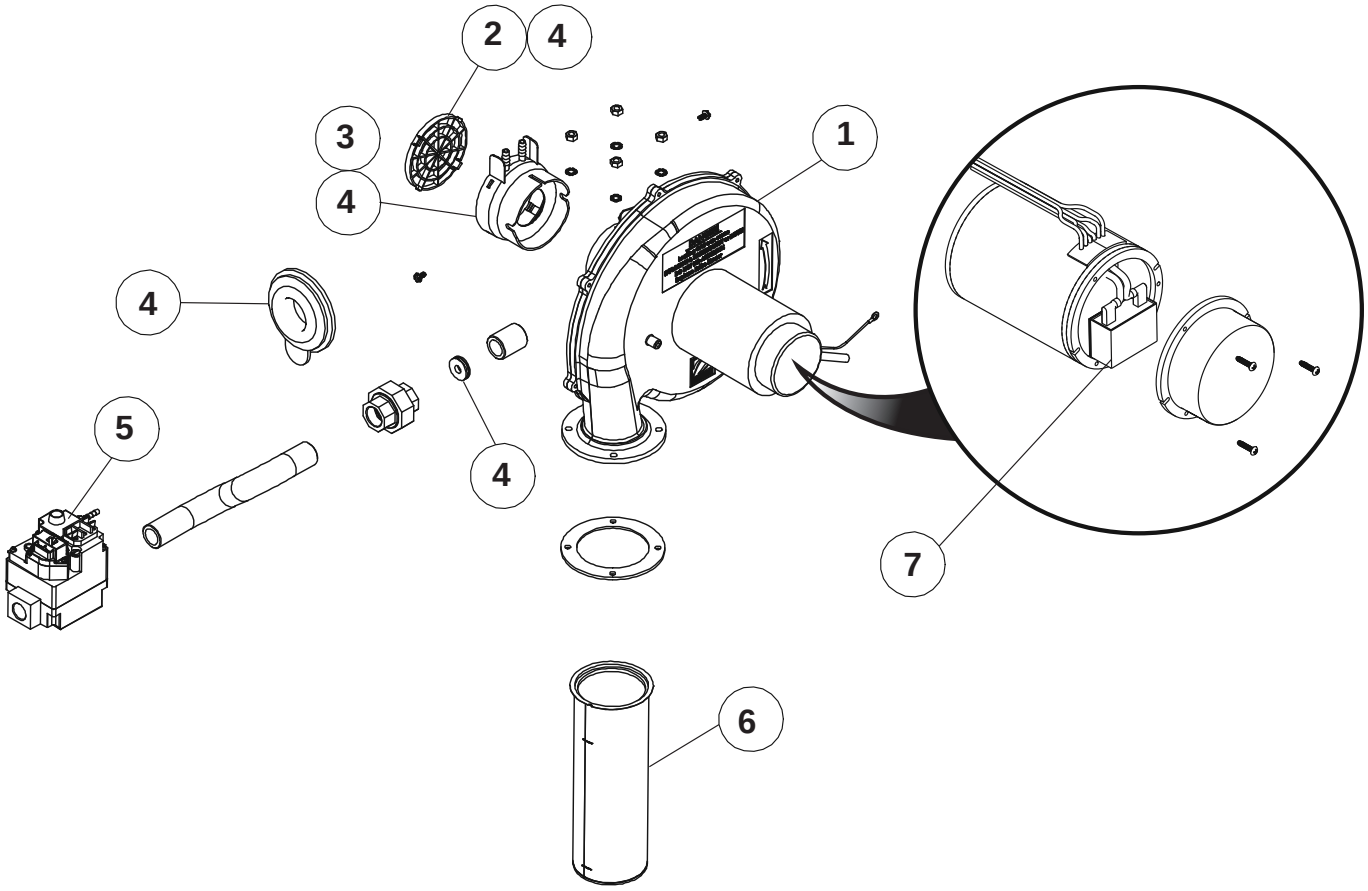

12.4 Water System Spare Parts List and Exploded Parts Diagrams

Key No	Description	model 200	model 260	model 400
1	Access Door Kit (with O-Ring Seal and Screws)	R0589600	R0589600	R0589600
2	Thermal Regulator Valve Kit (TRV)	R0589700	R0589700	R0589700
3	Bypass Kit	R0589800	R0589800	R0589800
4	Drain Plug Kit	R0446000	R0446000	R0446000
5	Gasket and Seals Kit	R0589500	R0589500	R0589500
6	Manifold Backplate Kit	R0590002	R0590003	R0590005
7	Manifold, 3 Port (no backplate included; must order separately)	R0590100	R0590100	R0590100
8	Water Pressure Switch Kit	R0457001	R0457001	R0457001
9	Goody Bag Kit†	R0593500	R0593500	R0593500
10	Universal Half Union Kit (1 Ea, requires 2 kits for full unit replacement)	R0522900	R0522900	R0522900
11	Sweep Elbow Aqualink® Temp Sensor	SEAQL1001	SEAQL1001	SEAQL1001
12	Drain Cap Assembly Kit	R0523000	R0523000	R0523000
13	Pressure Relief Valve (PRV) Install Kit	R0336101	R0336101	R0336101
14	Flow Plate Assembly	R0725201	R0725202	R0725203

† Goody Bag Kit Also Includes the Installation and Operation Manual and the Universal Controller Quick Guide

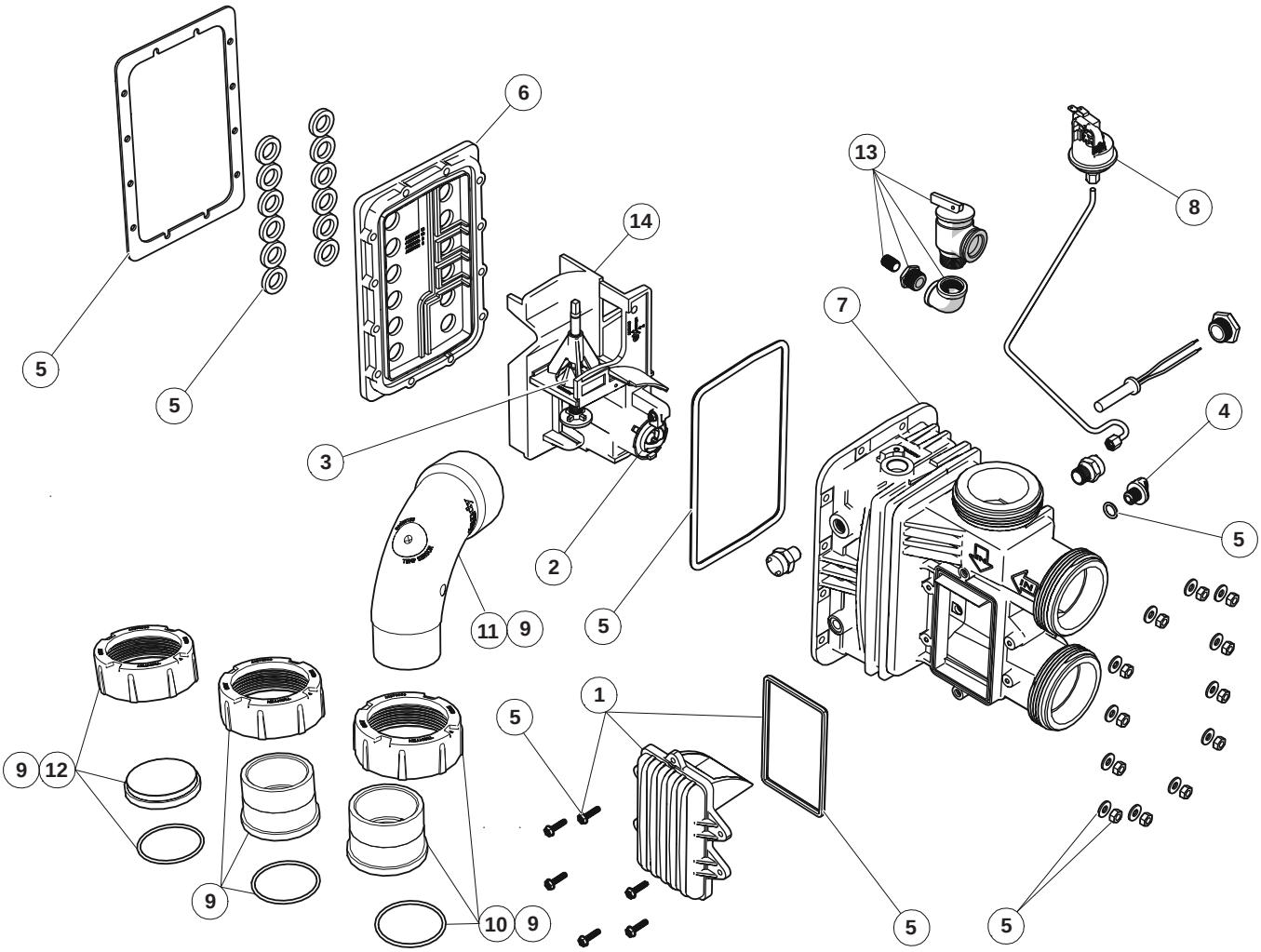

12.5 Electrical System Spare Parts List and Exploded Parts Diagrams

Key No*	Description	model 200	model 260	model 400
1	Ignition Control Kit	R0456900	R0456900	R0456900
2	Transformer Kit	R0456301	R0456301	R0456301
3	User Interface Kit	R0591901	R0591901	R0591901
4	User Interface Lid Kit	R0592000	R0592000	R0592000
5	Wiring Harness Kit	R0592100	R0592100	R0592100
6	Air Pressure Switch Kit	R0456400	R0456400	R0456400
7	Flue Temp Sensor§	R0719400	R0719400	R0719400
7a	Fusible Link†	R0524300	R0524300	R0524300
8	Water Pressure Switch Kit	R0013200	R0013200	R0013200
9	Power Interface Board (PIB)§	R0719500	R0719500	R0719500
	Power Interface Board (PIB)‡	R0458200	R0458200	R0458200
10	Power Distribution Board (PDB)	R0458100	R0458100	R0458100
11	Temperature Sensor Kit	R0456500	R0456500	R0456500
12	High Limit Temperature Sensors Kit	R0592300	R0592300	R0592300
13	Igniter Kit	R0457502	R0457502	R0457502
14	Power Interface Harness	R0457701	R0457701	R0457701

† Fusible Link to replace factory installed fusible link on heaters with serial number revision G or earlier.
‡ PIB to replace factory installed PIB on heaters with serial number revision G or earlier.
Upgraded components R0719400 and R0719500 must both be installed for heater to operate properly.
§ Flue Temp Sensor and PIB must be replaced together in Rev G and earlier heaters. Both parts are required in order to install the VersaFlo™ Bypass accessory PN: JXIVFKIT.

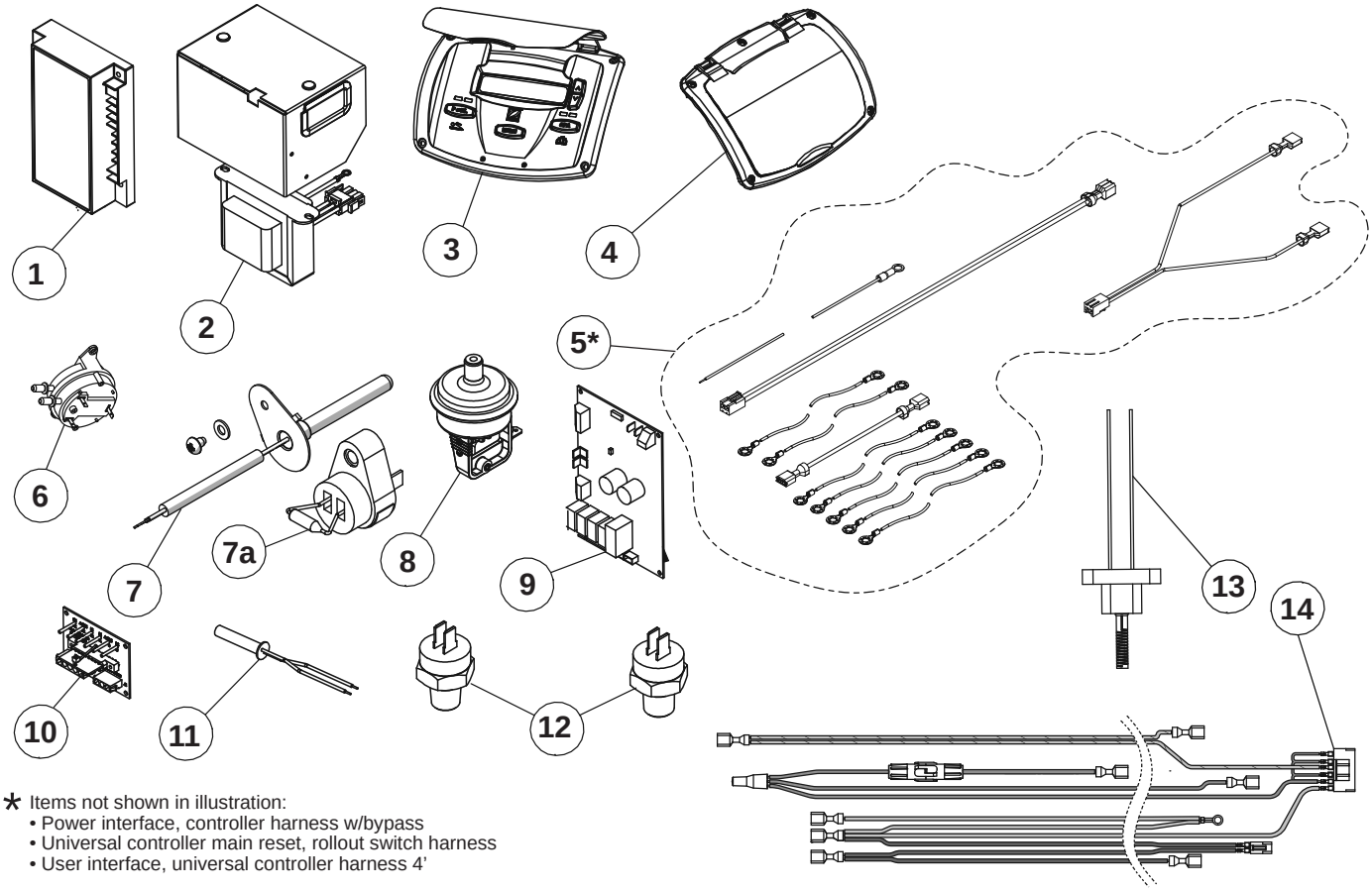

* Items not shown in illustration:
- Power interface, controller harness w/bypass
- Universal controller main reset, rollout switch harness
- User interface, universal controller harness 4'

NOTES

NOTES

NOTES

Zodiac Pool Systems, Inc.
2620 Commerce Way, Vista, CA 92081
1.800.822.7933 | www.jandy.com

ZODIAC® is a registered trademark of Zodiac International, S.A.S.U., used under license.
All other trademarks referenced herein are the property of their respective owners.

©2016 Zodiac Pool Systems, Inc. H0574300_REVB